ACCESS SERVICE

7. Special Access Service

7.1 General

Special Access Services are classified as competitive telecommunications services. The Company may offer these competitive services on such terms and for such rates as it deems reasonable without regard to this or other referenced tariffs. Individual contracts will specify the terms, length of service, conditions, and rate levels applicable to those specific customers. Such contracts will be filed with the Illinois Commerce Commission as prescribed in Section 13-509 of the Illinois Public Utilities Act.

Special Access Service provides a transmission path to connect customer designated premises* or a customer designated premises and a WATS serving office, either directly or through a Telephone Company Hub where bridging or multiplexing functions are performed or to connect a customer designated premises and a Telephone Company Hub where cross-connection functions are performed. Special Access Service includes all exchange access not utilizing Telephone Company end office switches.

The connections provided by Special Access Service can be either analog or digital. Analog connections are differentiated by spectrum and bandwidth. Digital connections are differentiated by bit rate.

Rates and charges for Special Access Service are set forth in Section 7.5 following, with the exception of the services provided by the Telephone Company in the Metropolitan Statistical Areas (MSAs) in which the Telephone Company has received Phase II pricing flexibility pursuant to Subpart H of Part 69 of the Commission's Rules. The rates and charges for the Special Access Service in the MSAs that have received Phase II pricing flexibility are set forth in Section 21.

* Telephone Company Centrex CO-like switches, Telephone Company Answering Service Concentrators, and Telephone Company Direct Inward Dialing (DID) facility locations are considered to be customer premises for purposes of administering regulations and rates of Section 7 of this tariff and, in the case of DID facility locations, only to permit customers to provide DID service to Radio Common Carriers

ACCESS SERVICE

7. Special Access Service (cont'd)

7.1.1 Channel Types

There are eleven types of channels used to provide Special Access Services. Each type has its own characteristics. All are subdivided by one or more of the following:

- Transmission specifications,
- Bandwidth,
- Speed (i.e., bit rate),
- Spectrum

Customers can order a basic channel and select, from a list of available transmission parameters and network channel interfaces, those that they desire to meet specific communications requirements.

For purposes of ordering channels, each has been identified as a type of Special Access Service. However, such identification is not intended to limit a customer's use of the channel nor to imply that the channel is limited to a particular use. For example, if a customer's equipment is capable of transmitting voice over a channel that is identified as a Metallic Service[1] in this tariff, there is no restriction against doing so. (N)

[1] Effective September 9, 2020, this Service will no longer be available for purchase by new or existing customers, and service agreements may no longer be renewed. In addition, requests to move, add or change existing service arrangements will not be accepted. Following the expiration of a customer's existing term agreement, service will be provided on a month-to-month basis at the applicable monthly extension rates until the service is discontinued. AT&T currently plans to discontinue this Service on or after June 30, 2024. (N)

ACCESS SERVICE

7. Special Access (Cont'd)

7.1 General (Cont'd)

7.1.1 Channel Types (Cont'd)

Following is a brief description of each type of channel:

Metallic[1] - a channel for the transmission of low speed varying signals at rates up to 30 baud.

Telegraph Grade[1] - a channel for the transmission of binary signals at rates of 0 to 75 baud or 0 to 150 baud. (T)

Direct Analog - A channel for the transmission of analog signals within an approximate bandwidth of 300-3000 Hz.

Dedicated Access Line (DAL)[1] - a channel from a customer designated premises to a WATS serving office for 800 Service, WATS or similar services.

(D)
(D)

Video - a channel for the analog or digital transmission of a standard 525 line/60 field monochrome or National Television Systems Committee color video signal and from one to four associated 5 or 15 kHz audio signals. The bandwidth for an analog Video channel is either 30 Hz to 4.5 MHz or 30 Hz to 6.6 MHz.

[1] Effective September 9, 2020, this Service will no longer be available for purchase by new or existing customers, and service agreements may no longer be renewed. In addition, requests to move, add or change existing service arrangements will not be accepted. Following the expiration of a customer's existing term agreement, service will be provided on a month-to-month basis at the applicable monthly extension rates until the service is discontinued. AT&T currently plans to discontinue this Service on or after June 30, 2024.

(D)
(D)

7. Special Access Service (Cont'd)

7.1 General (Cont'd)

7.1.1 Channel Types (Cont'd)

Base Rate Services - a channel for the digital transmission of serial data at discrete bit rates of 2.4, 4.8, 9.6, 19.2, 56.0 and 64.0 Kbps.

DS1 Service - a channel for the digital transmission of serial data at a discrete bit rate of 1.544 Mbps.

DS3 Service - a channel for the digital transmission of serial data at the discrete bit rate of 44.736 Mbps.

OC-3 Service - a channel for the optical transmission of data based upon the Synchronous Optical Network (SONET) at a rate of 155.52 Mbps.

OC-12 Service - a channel for the optical transmission of data based upon the Synchronous Optical Network (SONET) at a rate of 622.08 Mbps.

OC-48 Service - a channel for the optical transmission of data based upon the Synchronous Optical Network (SONET) at a rate of 2488.32 Mbps.

OC-192 Service – a channel for the optical transmission of data based upon the Synchronous Optical Network (SONET) at a rate of 9953.28 Mbps.

ACCESS SERVICE

7. Special Access Service (Cont'd)

7.1 General (Cont'd)

7.1.1 Channel Types (Cont'd)

Detailed descriptions of each of the channel types are provided in 7.2 following.

The Customer also has the option of ordering direct analog service[1], or DS1 or DS3 Service operating at terminating speeds of 1.544 Mbps or 44.736 Mbps, to a Telephone Company Hub for multiplexing to individual channels of a lower capacity or bandwidth. Descriptions of the types of multiplexing available at the Hubs, as well as the number of individual channels which may be derived from each type of facility are set forth in Section 7.2 following. Additionally, the Customer may specify optional features for the individual channels derived from the facility to further tailor the channel to meet specific communications requirements, Descriptions of the optional features and functions available are also set forth in Section 7.2. (N)

For example, a Customer may order a 44.736 Mbps facility from a Customer designated premises to a Telephone Company Hub for multiplexing to twenty eight 1.544 Mbps channels. The 1.544 Mbps channels may be further multiplexed at the same or a differen Hub to Direct Analog Service[1] (i.e., Group Level) channels or may be extended to other Customer designated premises. Optional features man be added to either the 1.544 Mbps or the Direct Analog[1] Service Channels. (N) (N)

[1] Effective September 9, 2020, this Service will no longer be available for purchase by new or existing customers, and service agreements may no longer be renewed. In addition, requests to move, add or change existing service arrangements will not be accepted. Following the expiration of a customer's existing term agreement, service will be provided on a month-to-month basis at the applicable monthly extension rates until the service is discontinued. AT&T currently plans to discontinue this Service on or after June 30, 2024. (N) (N)

ACCESS SERVICE

7. Special Access Service (Cont'd)

7.1 General (Cont'd)

7.1.2 Rate Categories

There are four basic rate categories which apply to Special Access Service:

- Local Distribution Channel (described in 7.1.2(A) following)
- Channel Mileage Termination (described in 7.1.2(B) following)
- Channel Mileage (described in 7.1.2(C) following)
- Optional Features and Functions (described in 7.1.2(D) following)

/1/ Material previously appeared on Original page 234.

7. Special Access Service (Cont'd)

7.1 General (Cont'd)

7.1.2 Rate Categories (Cont'd)

(A) Local Distribution Channel

The Local Distribution Channel rate category provides for the communications path between a customer designated premises and the serving wire center of that premises. Included as part of the Local Distribution Channel is a standard network channel interface arrangement which defines the technical characteristics associated with the type of facilities to which the access service is to be connected at the Point of Termination (POT) and the type of signaling capability, if any. The signaling capability itself is provided as an optional feature as set forth in (D) following. One Local Distribution Channel charge applies per customer designated premises at which the channel is terminated. This charge will apply even if the customer designated premises and the serving wire center are co-located in a Telephone Company building.

DS3 Local Distribution Channels with an Optical Interface are composed of two rate elements; DS3 Service Packages (SP) and DS3 Service Channels (SC)

(B) Channel Mileage Termination

The Channel Mileage Termination rate category provides for the termination of transmission facilities between the serving wire centers associated with two customer designated premises, between a serving wire center associated with a customer designated premises and a Telephone Company Hub, between a serving wire center associated with a customer designated premises and an international boundary point, between a serving wire center associated with a customer designated premises and a WATS serving office, or between two Telephone Company Hubs. All of these transmission facilities so terminated are categorized as Channel Mileage, as described below. One Channel Mileage Termination charge applies per end of Channel Mileage terminated in the Telephone Company's serving area. The Channel Mileage Termination charge does not apply to circuits which have no Channel Mileage.

7. Special Access Service (Cont'd)

7.1 General (Cont'd)

7.1.2 Rate Categories (Cont'd)

(C) Channel Mileage

The Channel Mileage rate category provides for the transmission facilities between the serving wire centers associated with two customer designated premises, between a serving wire center associated with a customer designated premises and a Telephone Company Hub, between a serving wire center associated with a customer designated premises and an international boundary point, between a serving wire center associated with a customer designated premises and a WATS serving office, or between two Telephone Company Hubs. One Channel Mileage charge applies per mile of interoffice transport, calculated as described in 7.4.6, following.

(D) Optional Features and Functions

The Optional Features and Functions rate category provides for optional features and functions which may be added to a Special Access Service to improve its quality or utility to meet specific communications requirements. These are not necessarily identifiable with specific equipment, but rather represent the end result in terms of performance characteristics which may be obtained. These characteristics may be obtained by using various combinations of equipment. Although the equipment necessary to perform a specified function may be installed at various locations along the path of the service, it will be charged for as a single rate element.

Material formerly appeared in ILL. C. C. No. 15, Section 7.1.2, Page 247.

7. Special Access Service (Cont'd)

7.1 General (Cont'd)

7.1.2 Rate Categories (Cont'd)

(D) Optional Features and Functions (Cont'd)

Examples of Optional Features and Functions that are available include, but are not limited to, the following:

- Signaling Capability
- Hubbing Functions
- Conditioning
- Transfer Arrangements

A Hub is a Telephone Company designated serving wire center at which bridging, multiplexing or cross-connection functions are performed. The bridging functions performed are to connect three or more customer designated premises in a multipoint arrangement. The multiplexing functions are to channelize analog or digital facilities to individual services requiring a lower capacity or bandwidth. Hubs for multiplexing may be designated as Intermediate or Terminus Hubs as set forth in 2.6 preceding. The cross-connection functions provide for the connection of two digital services of the same bit rate at Fiber Hub locations set forth in 7.4.10, following.

Descriptions for each of the available Optional Features and Functions are set forth in 7.2 following.

7.1.3 Service Configurations

There are two types of service configurations over which Special Access Services are provided: two-point service and multipoint service.

Material formerly appeared in ILL. C. C. No. 15, Sections 7.1.2 and 7.1.3, Page 248.

7. Special Access Service (Cont'd)

7.1 General (Cont'd)

7.1.3 Service Configurations (Cont'd)

(A) Two-Point Service

A two-point service connects two customer designated premises or a customer designated premises and a wire center for connection with other network services (e.g., WATS) either on a directly connected basis or through a Hub where multiplexing functions are performed.

Applicable rate elements are:

- Local Distribution Channel*
- Channel Mileage Terminations (as applicable)
- Channel Mileage (as applicable)
- Optional Features and Functions (when applicable)

* Only one Local Distribution Channel will apply for Dedicated Access Line[1] Service. (N)

[1] Effective September 9, 2020, this Service will no longer be available for purchase by new or existing customers, and service agreements may no longer be renewed. In addition, requests to move, add or change existing service arrangements will not be accepted. Following the expiration of a customer's existing term agreement, service will be provided on a month-to-month basis at the applicable monthly extension rates until the service is discontinued. AT&T currently plans to discontinue this Service on or after June 30, 2024. (N) (N)

7. Special Access Service (Cont'd)

7.1 General (Cont'd)

7.1.3 Service Configurations (Cont'd)

(A) Two-Point Service (Cont'd)

In addition, a Special Access Surcharge as set forth in 7.4.2 following and a Message Station Equipment Recovery charge as set forth in 7.4.3 following may be applicable.

The following diagram depicts a two-point Direct Analog Service[1] connecting two customer designated premises located 15 miles apart. The service is provided with C-Type conditioning. (N)

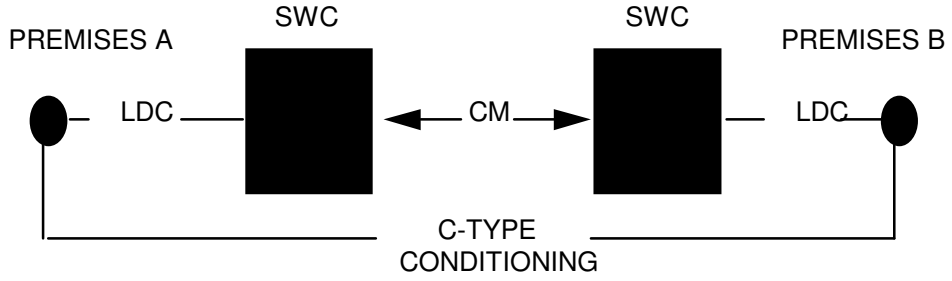

ldc - local distribution channel
CMT - mileage termination
cm - channel mileage
swc - serving wire center

Applicable rate elements are:
- Local Distribution Channel (two applicable)
- Channel Mileage Termination (two applicable)
- Channel Mileage (15 miles)
- C-Type Conditioning Optional Feature (two applicable)

[1] Effective September 9, 2020, this Service will no longer be available for purchase by new or existing customers, and service agreements may no longer be renewed. In addition, requests to move, add or change existing service arrangements will not be accepted. Following the expiration of a customer's existing term agreement, service will be provided on a month-to-month basis at the applicable monthly extension rates until the service is discontinued. AT&T currently plans to discontinue this Service on or after June 30, 2024. (N)

7. Special Access Service (Cont'd)

7.1 General (Cont'd)

7.1.3 Service Configurations (Cont'd)

(A) Two-Point Service (Cont'd)

The following diagram depicts a Dedicated Access Line[1] Service where the other network service (e.g., WATS) serving office is 10 miles from serving wire center of the customer designated premises. (N)

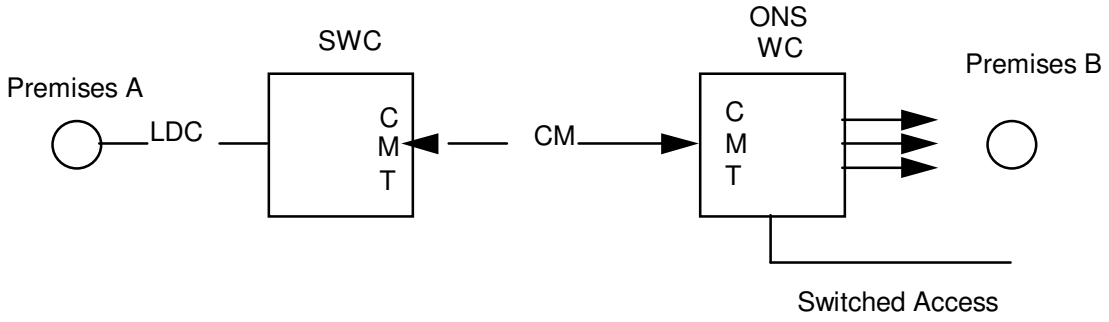

LDC - Local Distribution Channel
CMT - Channel Mileage Termination
CM - Channel Mileage
SWC - Serving Wire Center
ONS - Other Network Service Wire Center (e.g., WATS)

Applicable rate elements are:

- Local Distribution Channel (one applicable)
- Channel Mileage Termination (two applicable)
- Channel Mileage (10 miles)
- Switched Access (see Section 6)

[1] Effective September 9, 2020, this Service will no longer be available for purchase by new or existing customers, and service agreements may no longer be renewed. In addition, requests to move, add or change existing service arrangements will not be accepted. Following the expiration of a customer's existing term agreement, service will be provided on a month-to-month basis at the applicable monthly extension rates until the service is discontinued. AT&T currently plans to discontinue this Service on or after June 30, 2024. (N)

7. Special Access Service (Cont'd)

7.1 General (Cont'd)

7.1.3 Service Configuration (Cont'd)

(A) Two-Point Service (Cont'd)

The following diagram depicts a two-point service, with Premises A served by DS1 Service and Premises B served by Direct Analog Service, multiplexed at an Intermediate Hub located 10 miles from the serving wire center for Premises A and 5 miles from the serving wire center for Premises B.

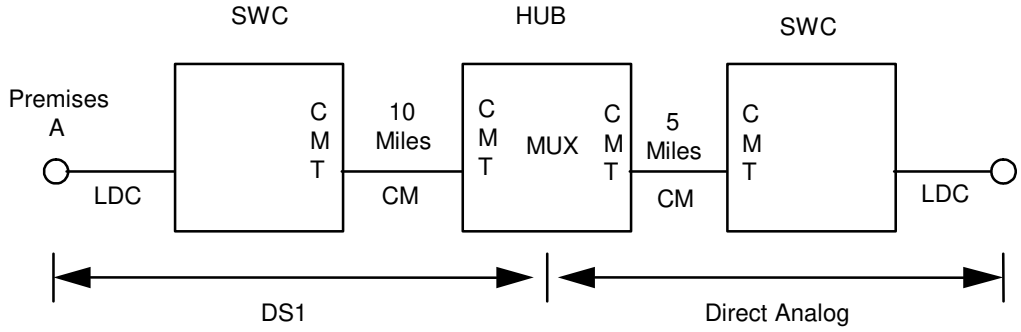

LDC - Local Distribution Channel
CMT - Channel Mileage Termination
CM - Channel Mileage
MUX - DS1 to Voice Multiplexing
SWC - Serving Wire Center

Applicable rate elements are:

- Local Distribution Channel
  1 DS1
  1 Direct Analog

- Channel Mileage Termination
  2 DS1
  2 Direct Analog[1] (N)

- Channel Mileage
  10 DS1
  5 Direct Analog[1] (N)

- Multiplexing
  1 DS1 to Voice/Base Rate

[1] Effective September 9, 2020, this Service will no longer be available for purchase by new or existing customers, and service agreements may no longer be renewed. In addition, requests to move, add or change existing service arrangements will not be accepted. Following the expiration of a customer's existing term agreement, service will be provided on a month-to-month basis at the applicable monthly extension rates until the service is discontinued. AT&T currently plans to discontinue this Service on or after June 30, 2024. (N) (N)

7. Special Access Service (Cont'd)

7.1 General (Cont'd)

7.1.3 Service Configuration (Cont'd)

(A) Two-Point Service (Cont'd)

The following diagram depicts two two-point DS3 Services cross-connected at a Fiber Hub. The first DS3 Service connects Customer A's designated premises to the Fiber Hub. The second DS3 Service connects Customer B's designated premises to the Fiber Hub.

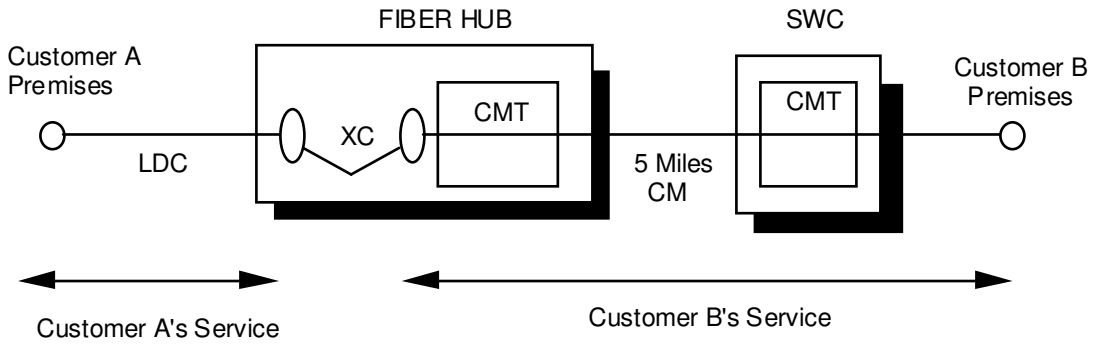

CM - Channel Mileage
CMT - Channel Mileage Termination
LDC - Local Distribution Channel
SWC - Serving Wire Center
XC - Cross-Connection

Applicable rate elements are:

Local Distribution Channel - Customer A
Local Distribution Channel - Customer B
Cross-Connection - DS3 to DS3
5 Miles Channel Mileage - Customer B
2 Channel Mileage Terminations - Customer B

The DS3 to DS3 Cross-Connection may be ordered by either customer, with authorization from the other customer to make the connection of the two services.

7. Special Access Service (Cont'd)

7.1 General (Cont'd)

7.1.3 Service Configurations (Cont'd)

(B) Multipoint Service

Multipoint service connects three or more customer designated premises through a Telephone Company Hub. There is no limitation on the number of mid-links available with multipoint service. However, when more than three mid-links are provided in tandem, the quality of the service may be degraded. A mid-link is a channel between Hubs (i.e., bridging locations). Only certain types of Special Access Service are provided as multipoint service. These are so designated in the Service Descriptions set forth in 7.2 following.

Multipoint service utilizing a customized technical specifications package as set forth in 7.2 following will be provided when technically possible. If the Telephone Company determines that the requested characteristics for a multipoint service are not compatible, the customer will be advised and given the opportunity to change the order.

When ordering, the customer will specify the desired bridging Hub(s) selected from the National Exchange Carrier Association Tariff F.C.C. NO. 4. This tariff identifies the type(s) of bridging functions which are available and the serving wire centers where they are available.

Applicable Rate Elements are:

- Local Distribution Channels (one per customer designated premises)
- Channel Mileage Termination (one per end of Channel Mileage)
- Channel Mileage (as applicable between each designated customer premises and the Hub and between Hubs.)
- Bridging
- Additional Optional Features (when applicable).

In addition, the Special Access Surcharge as set forth in 7.4.2 following and a Message Station Equipment Recovery Charge as set forth in 7.4.3 following may be applicable.

Material formerly appeared in ILL. C. C. No. 15, Section 7.1.3, Page 250.

7. Special Access Service (Cont'd)

7.1 General (Cont'd)

7.1.3 Service Configurations (Cont'd)

(B) Multipoint Service (Cont'd)

Example: Direct Analog[1] Service multipoint service connecting four customer premises via two customer specified bridging hubs. (N)

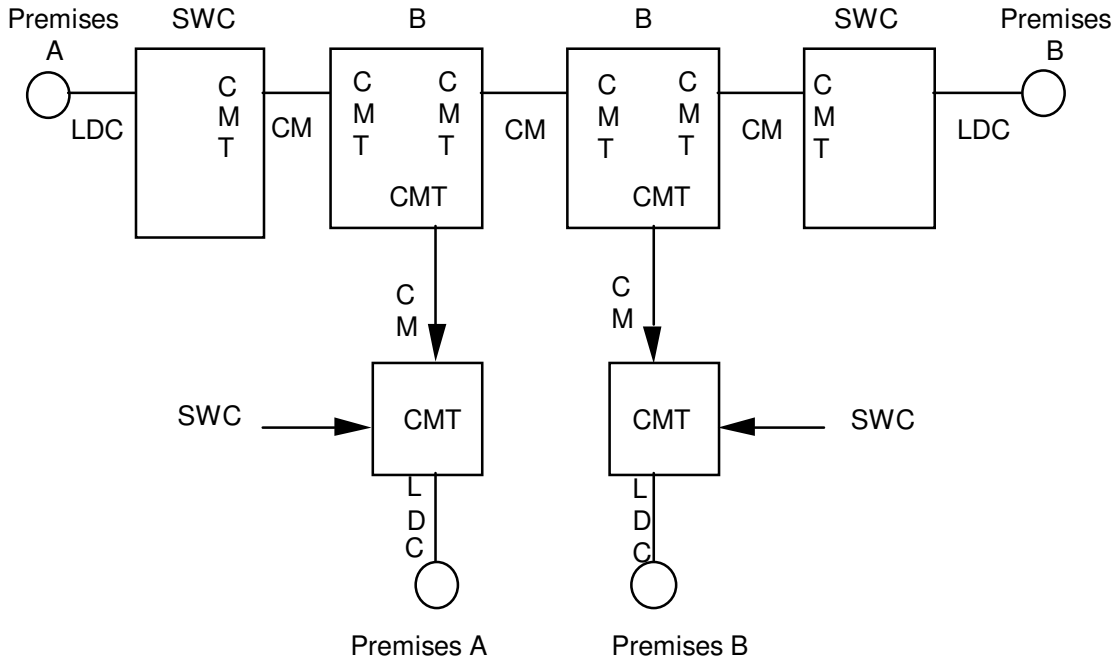

LDC - LOCAL DISTRIBUTION CHANNEL
CMT - CHANNEL MILEAGE TERMINATION
CM - CHANNEL MILEAGE
B - BRIDGING
SWC - SERVING WIRE CENTER

Applicable rate elements are:

- Local Distribution Channels (four applicable)
- Channel Mileage Terminations (ten applicable)
- Channel Mileage (for appropriate mileages)
- Bridging (six applicable, i.e., each bridge port)

[1] Effective September 9, 2020, this Service will no longer be available for purchase by new or existing customers, and service agreements may no longer be renewed. In addition, requests to move, add or change existing service arrangements will not be accepted. Following the expiration of a customer's existing term agreement, service will be provided on a month-to-month basis at the applicable monthly extension rates until the service is discontinued. AT&T currently plans to discontinue this Service on or after June 30, 2024. (N)

7. Special Access Service (Cont'd)

7.1 General (Cont'd)

7.1.4 Alternate Use

Alternate Use occurs when a service is arranged by the Telephone Company so that the customer can select different types of transmission at different times. A customer may use a service in any privately beneficial manner. However, where technical or engineering changes are required to effectuate an alternate use, the Telephone Company will make such special arrangements available on an individual case basis.

The arrangement required to transfer the service from one operation to the other (i.e., the transfer relay and control leads) will be as set forth in ILL. C. C. No. 20, Part 2, Section 7, Specialized Service Arrangements. The customer will pay the stated tariff rates for the Access Service rate elements for the service ordered (i.e., Local Distribution Channels, Channel Mileage Terminations and Channel Mileage (as applicable) and Optional Features (if any)).

7.1.5 Special Facilities Routing

A customer may request that the facilities used to provide Special Access Service be specially routed. The regulations, rates and charges for Special Facilities Routing are set forth in 11.following.

7.1.6 Design Layout Report

At the request of the customer, the Telephone Company will provide to the customer the make-up of the facilities and services provided under this tariff as Special Access Service to aid the customer in designing its overall service. This information will be provided in the form of a Design Layout Report. The Design Layout Report will be provided to the customer at no charge, and will be reissued or updated whenever these facilities are materially changed.

Material formerly appeared in ILL. C. C. No. 15, Sections 7.1.4, 7.1.5 and 7.1.6, Page 252.

7. Special Access Service (Cont'd)

7.1 General (Cont'd)

7.1.7. Acceptance Testing

At no additional charge, the Telephone Company will, at the customer's request, cooperatively test, at any time of installation, the following parameters:

(A) For Direct Analog[1] Services, acceptance test will include test for loss, 3-tone slope, DC continuity, operational signaling, C-notched noise, and C-message noise when these parameters are applicable and specified in the order for service. Additionally, for Direct Analog Services, a balance (improved loss) test will be made if the customer has ordered the improved loss optional feature.

(B) For other analog services (i.e., Metallic[1], Telegraph[1], Video, and Dedicated Access Line[1]) and for digital services (i.e., Base Rate, DS1 and DS3 Services), acceptance tests will include tests for the parameters specified in the order for service. (D)

In addition to the above tests, Additional Cooperative Acceptance Testing for Direct Analog Service to test other parameters. As described in 13.3.4(B) following, is available at the customer's request. All test results will be made available to the customer upon request.

7.1.8 Ordering Options and Conditions

Special Access Service is ordered under the Access Order Provisions set forth in 5. preceding. Also included in that section are other charges which may be associated with ordering Special Access Service (e.g., Service Date Change Charges, Cancellation Charges, etc.)

7.1.9 Trouble Reporting

The Telephone Company will be responsible for receiving, from customers, trouble reports sectionalized to Telephone Company facilities and/or equipment. The Telephone Company will test cooperatively or independently to assist in trouble sectionalization. Other charges as described in this tariff will still apply.

[1] Effective September 9, 2020, this Service will no longer be available for purchase by new or existing customers, and service agreements may no longer be renewed. In addition, requests to move, add or change existing service arrangements will not be accepted. Following the expiration of a customer's existing term agreement, service will be provided on a month-to-month basis at the applicable monthly extension rates until the service is discontinued. AT&T currently plans to discontinue this Service on or after June 30, 2024.

(D)
(D)

ACCESS SERVICE

7. Special Access Service

7.1 General (Cont'd)

7.1.10 Jurisdictional Change Certification Requirement

When the customer requests a change of classification of a Special Access Service from interstate to intrastate (and hence a change in jurisdiction), by terminating purchase of the service out of the interstate tariff and ordering the equivalent service out of this tariff, the customer in addition to complying with the certification requirements in Section 2.3.12 (B) preceding must also provide the Telephone Company with the data the customer uses to determine that interstate usage is less than ten percent. The customer shall keep records of system design and functions from which the percentages of interstate and intrastate usage can be ascertained. The Telephone Company can ask at any future date for current records and the customer shall supply the data within 30 days of the Telephone Company request.

7. Special Access Service (Cont'd)

7.2 Service Descriptions

For the purposes of ordering, the categories of Special Access Service are:

Metallic[1] (MT)
Telegraph Grade[1] (TG)
Direct Analog Service[1] (VG)
Dedicated Access Line[1] (DAL)

(D)

Video (TV)

DS1 Service (HC1) (HX)
DS3 Service (HC3)
Base Rate Services (DA1 to DA6)
OC-3 Service (HO3)
OC-12 Service (HO12)
OC-48 Service (HO48)
OC-192 Service (HO192)

Each service consists of a basic channel to which a technical specifications package (customized or predefined), network channel interface(s) and, when desired, optional features and functions are added to construct the service desired by the customer. Each of the components of the service are described in this section.

Customized technical specifications packages will be provided where technically feasible. If the Telephone Company determines that the requested parameter specifications are not compatible, the customer will be advised and given the opportunity to change the order.

When a customized channel is ordered, the customer will be notified whether Additional Engineering Charges apply. In such cases, the customer will be given an estimate of the hours and charges to be billed before any further action is taken on the order.

The channel description (NC code) specifies the characteristics of the basic channel and indicates whether the channel is provided between customer designated premises or between a customer designated premises and a Telephone Company Hub where bridging, cross-connection or multiplexing functions are performed.

[1] Effective September 9, 2020, this Service will no longer be available for purchase by new or existing customers, and service agreements may no longer be renewed. In addition, requests to move, add or change existing service arrangements will not be accepted. Following the expiration of a customer's existing term agreement, service will be provided on a month-to-month basis at the applicable monthly extension rates until the service is discontinued. AT&T currently plans to discontinue this Service on or after June 30, 2024.

(D)
I
(D)

ACCESS SERVICE

7. Special Access Service (Cont'd)

7.2 Service Descriptions (Cont'd)

Information contained in the technical specifications packages indicates the transmission parameters that are available with each package. This information is displayed in a matrix with the transmission parameters listed down the left side and the packages listed across the top. Each package is identified by a code, e.g., VGC. the first two letters of the code indicate the category of Special Access Service to which the parameters are applicable. These two letter codes are shown above in parentheses following the category of Special Access Service. The letter "C" following the two letter code indicates the technical specifications package for a customized service. A numeric or alpha-numeric designation following the two letter code indicates the specific predefined package. For a customized service, the customer may select any parameters available with that category of service as long as the parameters are compatible. When appropriate, the Technical Reference which contains detailed specifications for the parameters is shown following the matrix.

Network channel interfaces at each point of termination on a two-point service may be symmetrical or asymmetrical. On a multipoint service they may also be symmetrical or asymmetrical However, communications can only be provided between points of termination with compatible network channel interfaces. Only certain network channel interfaces are compatible. These are set forth in 7.3 following in a combination format.

Only certain network channel interface combinations are available with the predefined technical specifications packages. These are delineated in the Technical References set forth at the end of this 7.2. When a customized channel is requested, all network channel interface combinations available with the specified type of service are available.

The optional features and functions available with each type of Special Access Service are described in this section. The optional features and functions information also indicates with which technical specifications packages they are available. Such information is displayed in a matrix with the optional feature or function listed down the left side and the technical specifications package listed across the top.

Material formerly appeared in ILL. C. C. No. 15, Section 7.2, Page 256.

ACCESS SERVICE

7. Special Access Service (Cont'd)

7.2 Service Descriptions

The Telephone Company will maintain existing transmission specifications on services installed prior to the effective date of this tariff, except that the existing services with performance specifications exceeding the standard listed in this provision will be maintained at the performance levels specified in this tariff. All services installed after the effective date of this tariff will conform to the transmission specification or standards contained in this tariff or in the following Technical References for each category of service:

Metallic[1]	TR-NPL-000336
Telegraph[1]	TR-NPL-000336
Direct Analog Service[1]	*TR-NPL-000335
	*PUB 41004, Table 4
Dedicated Access Line	TR-NPL-000334
Video	TR-NPL-000338
	AM-TR-NIS-000131

(D)

Base Rate Services	*TR-NPL-000341
	AM-TR-OAT-000070
DAL	AM-TR-NPL-000005
Secondary Channel	*TR-NPL-000157
DS1 Service	TR-INS-000342
	*PUB 62411
	AM-TR-TMO-000106
	AM-TR-TMO-000101

* In these publications, Direct Analog Service is referred to as Voice Grade Service, and Base Rate Service as Digital Data Service and DS1 Service and DS3 Service as High Capacity Service.

[1] Effective September 9, 2020, this Service will no longer be available for purchase by new or existing customers, and service agreements may no longer be renewed. In addition, requests to move, add or change existing service arrangements will not be accepted. Following the expiration of a customer's existing term agreement, service will be provided on a month-to-month basis at the applicable monthly extension rates until the service is discontinued. AT&T currently plans to discontinue this Service on or after June 30, 2024.

(D)
(D)

7. Special Access Service (Cont'd)

7.2 Service Descriptions

Clear Channel Capability	[1]TR-NPL-000054
DS3 Service	TR-INS-000342
Optical Interface:	
OC-3 Service,	
OC-12 Service, and	AM-TR-TMO-000072
OC-48 Service	AM-TR-TMO-000101 and
OC-192 Service	AM-TR-NIS-000111

7.2.1 Metallic Service

(A) Basic Channel Description

A Metallic[2] channel is an unconditioned two-wire channel capable of transmitting low speed varying signals at rates up to 30 baud. This channel is provided by metallic or equivalent facilities. Metallic[2] channels are provided between customer designated premises. Interoffice metallic facilities will be limited in length to a total of five miles per channel, and be provided where facilities are available. Interoffice metallic facilities (wire pairs) are in diminishing supply, and can be expected to become less available as optical fiber is deployed and wire cables are removed. (N) (N)

[1] In these publications, Direct Analog Service is referred to as Voice Grade Service, Base Rate Service as Digital Data Service, and DS1 Service and DS3 Service as High Capacity Service.

[2] Effective September 9, 2020, this Service will no longer be available for purchase by new or existing customers, and service agreements may no longer be renewed. In addition, requests to move, add or change existing service arrangements will not be accepted. Following the expiration of a customer's existing term agreement, service will be provided on a month-to-month basis at the applicable monthly extension rates until the service is discontinued. AT&T currently plans to discontinue this Service on or after June 30, 2024. (N) (N)

7. Special Access Service (Cont'd)

7.2 Service Descriptions (Cont'd)

7.2.1 Metallic[1] Service (Cont'd) (N)

(B) Technical Specifications Packages

	Package MT			
Parameter	C	1	2	3
DC Resistance Between Conductors	X	X	X	
Loop Resistance	X			X
Shunt Capacitance	X			X

The technical specifications are delineated in Technical Reference TR-NPL-000336.

(C) Network Channel Interfaces

Compatible network channel interfaces are set forth in 7.3 following.

[1] Effective September 9, 2020, this Service will no longer be available for purchase by new or existing customers, and service agreements may no longer be renewed. In addition, requests to move, add or change existing service arrangements will not be accepted. Following the expiration of a customer's existing term agreement, service will be provided on a month-to-month basis at the applicable monthly extension rates until the service is discontinued. AT&T currently plans to discontinue this Service on or after June 30, 2024 (N)

7. Special Access Service (Cont'd)

7.2 Service Descriptions (Cont'd)

7.2.2 Telegraph Grade Service

(A) Basic Channel Description

A Telegraph Grade[1] Channel is an unconditioned channel capable of transmitting binary signals at rates of 0-75 baud or 0-150 baud. This channel is furnished for half-duplex or duplex operation. Telegraph Grade[1] channels are provided between customer designated premises or between a customer designated premises and a Telephone Company Hub. (N)

(B) Technical Specifications Packages

Parameter	Package TG - C	1	2
Telegraph Distortion	X	X	X

The technical specifications are delineated in Technical Reference TR-NPL-000336.

(C) Network Channel Interfaces

Compatible network channel interfaces are set forth in 7.3 following.

[1] Effective September 9, 2020, this Service will no longer be available for purchase by new or existing customers, and service agreements may no longer be renewed. In addition, requests to move, add or change existing service arrangements will not be accepted. Following the expiration of a customer's existing term agreement, service will be provided on a month-to-month basis at the applicable monthly extension rates until the service is discontinued. AT&T currently plans to discontinue this Service on or after June 30, 2024. (N)

7. Special Access Service (Cont'd)

7.2 Service Descriptions (Cont'd)

7.2.3 Direct Analog Service *

(A) Basic Channel Description

(1) A Direct Analog[1] Service channel is a channel which provides voice frequency transmission capability in the nominal frequency range of 300 to 3000 Hz and may be terminated two-wire or four-wire. Direct Analog[1] Service channels are provided between customer designated premises or between a customer designated premises and a Telephone Company Hub. (N)

(2) Direct Analog[1] Service may be ordered to allow connections between the customer designated premises and wire center which provides Other Network Services. (N)

(a) Dedicated Access Line (DAL)[1] (N)

A Dedicated Access Line[1] Service provides a channel for voice frequency transmission capability. The service provides a connection between the customer designated premises and a WATS serving office associated with the closed end of 800 Service, WATS or similar services. It is provided for use with Switched Access Service as set forth in Section 6 preceding, or as set forth in the intrastate Access Service tariff and/or local general services tariff of the Telephone Company. Switched access traffic delivered by means of a Dedicated Access Line[1] is subject to Switched Access Service provisions of the applicable tariff. The jurisdiction of the Switched Access Service shall be determined as set forth in 2.3.10(E) preceding. (N)

The choice of the type of signaling is at the option of the customer and subject to the technical limitations identified in the Technical Reference TR-NPL-000334. Dedicated Access Line[1] Service is provided as an effective two-wire or an effective four-wire transmission path. (N)

* Also referred to as Voice Grade Service in Technical References.

[1] Effective September 9, 2020, this Service will no longer be available for purchase by new or existing customers, and service agreements may no longer be renewed. In addition, requests to move, add or change existing service arrangements will not be accepted. Following the expiration of a customer's existing term agreement, service will be provided on a month-to-month basis at the applicable monthly extension rates until the service is discontinued. AT&T currently plans to discontinue this Service on or after June 30, 2024. (N) (N)

ACCESS SERVICE

7. Special Access Service (Cont'd)

7.2 Service Descriptions (Cont'd)

7.2.3 Direct Analog Service[1] (Cont'd) (N)

(B) Technical Specifications Packages

	Package VG-												
Parameter	**C***	**1**	**2**	**3**	**4**	**5**	**6**	**7**	**8**	**9**	**10**	**11**	**12**
Attenuation Distortion	X	X	X	X	X	X	X	X	X	X	X	X	X
C-Message Noise	X	X	X	X	X	X	X	X	X	X	X	X	X
Echo Control	X	X	X	X		X		X	X			X	X
Envelope Delay Distortion	X						X	X	X	X	X	X	X
Frequency Shift	X						X	X	X	X	X	X	
Impulse Noise	X					X	X	X	X	X	X	X	X
Intermodulation Distortion	X						X	X	X	X	X	X	
Loss Deviation	X	X	X	X	X	X	X	X	X	X	X	X	X
Phase Hits, Gain Hits, and Dropouts	X												
Phase Jitter	X						X	X	X	X	X	X	
Signal-to-C-Message Noise				X									
Signal-to-C-Notch Noise	X					X	X	X	X	X	X	X	X

Package DAL

Parameters	**1**	**2**
Attenuation Distortion	X	X
C-Message Noise	X	X
Echo Control	X	X
Envelope Delay Distortion	X	X
Frequency Shift	X	X
Impulse Noise	X	X
Intermodulation Distortion	X	X
Loss Deviation	X	X
Phase Jitter	X	X
Signal-to-C Notch Noise	X	X

*The desired parameters are selected by the customer from the list of available parameters.

[1] Effective September 9, 2020, this Service will no longer be available for purchase by new or existing customers, and service agreements may no longer be renewed. In addition, requests to move, add or change existing service arrangements will not be accepted. Following the expiration of a customer's existing term agreement, service will be provided on a month-to-month basis at the applicable monthly extension rates until the service is discontinued. AT&T currently plans to discontinue this Service on or after June 30, 2024. (N) (N)

7. Special Access Service (Cont'd)

7.2 Service Descriptions (Cont'd)

7.2.3 Direct Analog Service[1] (Cont'd) (N)

(B) Technical Specifications Packages (Cont'd)

The technical specifications for these parameters (except for dropouts, gain hits, and phase hits) are delineated in Technical Reference TR-NPL-000334 and TR-NPL-000335. The technical specifications for dropouts, phase hits, and gain hits are delineated in Technical Reference PUB 41004, Table 4.

(C)Network Channel Interfaces

The following network channel interfaces for Direct Analog Service do not require signaling capability: AH, DA, DB, DD, DE, DS, NO, PR and TF.

The following network channel interfaces for Direct Analog Service require signaling capability: AB, AC, CT, DX, DY, EA, EB, EC, EX, GO, GS, LA, LB, LC, LO, LR, LS, RV and SF.

The following interfaces are available with DAL Service:
LO, LS, DS, GO, GS, EA, EB, RV.

Compatible network channel interfaces are set forth in 7.3 following.

(D) Optional Features and Functions

(1) Central Office Bridging Capability

(a) Voice and DAL Bridging (two-wire and four-wire)
(b) Data Bridging (two-wire and four-wire)

[1] Effective September 9, 2020, this Service will no longer be available for purchase by new or existing customers, and service agreements may no longer be renewed. In addition, requests to move, add or change existing service arrangements will not be accepted. Following the expiration of a customer's existing term agreement, service will be provided on a month-to-month basis at the applicable monthly extension rates until the service is discontinued. AT&T currently plans to discontinue this Service on or after June 30, 2024. (N)

ACCESS SERVICE

7. Special Access Service (Cont'd)

7.2 Service Descriptions (Cont'd)

7.2.3 Direct Analog Service (Cont'd)

(D) Optional Features and Functions (Cont'd)

(2) Reserved for Future Use

(3) Conditioning

Conditioning provides more specific transmission characteristics for Direct Analog[1] Service. C-Type conditioning controls attenuation distortion and envelope delay distortion. Sealing Current helps maintain continuity on dry metallic loops. (N)

In addition, a customer may desire that either the attenuation distortion or the envelope delay distortion, or both, be improved to more stringent specifications than those provided with C-Type conditioning. In such cases the customer has the option of ordering Improved Attenuation Distortion and Improved Envelope Delay Distortion, either separately or in combination, in lieu of C-Type conditioning. When either improved option (Improved Attenuation Distortion or Improved Envelope Delay Distortion) is ordered without the other, the performance specifications for the other parameter will be those provided with C-Type conditioning at no additional charge.

For two-point services, the parameters apply to each service. For multipoint services, the parameters apply to each mid-link or end-link. C-Type conditioning and Data Capability may be combined on the same service.

[1] Effective September 9, 2020, this Service will no longer be available for purchase by new or existing customers, and service agreements may no longer be renewed. In addition, requests to move, add or change existing service arrangements will not be accepted. Following the expiration of a customer's existing term agreement, service will be provided on a month-to-month basis at the applicable monthly extension rates until the service is discontinued. AT&T currently plans to discontinue this Service on or after June 30, 2024. (N) (N)

ACCESS SERVICE

7. Special Access Service (Cont'd)

7.2 Service Descriptions (Cont'd)

7.2.3 Direct Analog Service[1] (Cont'd) (N)

(D) Optional Features and Functions (Cont'd)

(3) Conditioning (Cont'd)

(a) C-Type Conditioning

C-Type Conditioning is provided for the additional control of attenuation distortion and envelope delay distortion on data services. The attenuation distortion and envelope delay distortion specifications for C-Type Conditioning are as set forth in the Technical References specified in 7.2.

[1] Effective September 9, 2020, this Service will no longer be available for purchase by new or existing customers, and service agreements may no longer be renewed. In addition, requests to move, add or change existing service arrangements will not be accepted. Following the expiration of a customer's existing term agreement, service will be provided on a month-to-month basis at the applicable monthly extension rates until the service is discontinued. AT&T currently plans to discontinue this Service on or after June 30, 2024. (N) (N)

7. Special Access Service (Cont'd)

7.2 Service Descriptions (Cont'd)

7. Special Access Service (Cont'd)

7.2 Service Descriptions (Cont'd)

7.2.3 Direct Analog Service[1] (Cont'd) (N)

(D) Optional Features and Functions (Cont'd)

(3) Conditioning (Cont'd)

(b) Improved Attenuation Distortion

Improved attenuation distortion is provided for additional control of attenuation distortion, and is provided in lieu of C-Type conditioning. The improved attenuation distortion specifications are as set forth in the Technical Reference specified in 7.2.

(c) Improved Envelope Delay Distortion

Improved envelope delay distortion is provided for additional control of envelope delay distortion, and is provided in lieu of C-Type conditioning. The improved envelope delay distortion specifications are as set forth in the Technical Reference specified in 7.2.

(d) Sealing Current Conditioning

Sealing Current Conditioning is provided to help maintain continuity on dry metallic loops. It is usually associated with four-wire DA or NO type network channel interfaces.

[1] Effective September 9, 2020, this Service will no longer be available for purchase by new or existing customers, and service agreements may no longer be renewed. In addition, requests to move, add or change existing service arrangements will not be accepted. Following the expiration of a customer's existing term agreement, service will be provided on a month-to-month basis at the applicable monthly extension rates until the service is discontinued. AT&T currently plans to discontinue this Service on or after June 30, 2024. (N)

7. Special Access Service (Cont'd)

7.2 Service Descriptions (Cont'd)

7.2.3 Direct Analog Service[1] (Cont'd) (N)

(D) Optional Features and Functions (Cont'd)

(4) Customer Specified Premises Receive Level

This option allows the customer to specify the receive level at the Point of Termination. The level must be within a specific range delineated in Technical Reference TR-NPL-000335 and associated Addendum.

(5) Improved Termination

On Effective Four-Wire Transmission at Four-Wire Point of Termination (applicable to each two-wire port): Provides for a fixed 600 ohm impedance, variable level range and simplex reversal. Telephone Company equipment is required at the customer's premises where this option is ordered. The Improved Termination parameters are delineated in Technical Reference TR-NPL-000335.

(6) Improved Return Loss

On Effective Two-Wire Transmission at Two-Wire Point of Termination: Provides for more stringent Echo Control specifications. In order for this option to be applicable, the transmission path must be four-wire at one POT and two-wire at the other POT. Placement of Telephone Company equipment may be required at the customer's premises with the two-wire POT. The Improved Return Loss parameters are delineated in Technical Reference TR-NPL-000335.

(7) Data Capability

Data Capability provides transmission characteristics suitable for data communications. Specifically, Data Capability provides for the control of Signal to C-Notched Noise Ratio and intermodulation distortion. It is available for two-point services or multipoint services.

[1] Effective September 9, 2020, this Service will no longer be available for purchase by new or existing customers, and service agreements may no longer be renewed. In addition, requests to move, add or change existing service arrangements will not be accepted. Following the expiration of a customer's existing term agreement, service will be provided on a month-to-month basis at the applicable monthly extension rates until the service is discontinued. AT&T currently plans to discontinue this Service on or after June 30, 2024. (N)

7. Special Access Service (Cont'd)

7.2 Service Descriptions (Cont'd)

7.2.3 Direct Analog Service[1] (Cont'd) (N)

(D) Optional Features and Functions (Cont'd)

(7) Data Capability (Cont'd)

The Signal to C-Notched Noise Ratio and intermodulation distortion parameters for Data Capability are:

- Signal to C-Notched Noise Ratio is equal to or greater than 32dB
- Intermodulation distortion:
  - Signal to second order modulation products (R2) is equal to or greater than 38dB
  - Signal to third order modulation products (R3) is equal to or greater than 42dB

When a service equipped with Data Capability is used for voice communications, the quality of the voice transmission may not be satisfactory.

(8) Reserved for Future Use

[1] Effective September 9, 2020, this Service will no longer be available for purchase by new or existing customers, and service agreements may no longer be renewed. In addition, requests to move, add or change existing service arrangements will not be accepted. Following the expiration of a customer's existing term agreement, service will be provided on a month-to-month basis at the applicable monthly extension rates until the service is discontinued. AT&T currently plans to discontinue this Service on or after June 30, 2024. (N) (N)

7. Special Access Services (Cont'd)

7.2 Service Descriptions (Cont'd)

7.2.3 Direct Analog Service[1] (Cont'd) (N)

(D) Optional Features and Functions (Cont'd)

(9) Signaling Capability

Signaling Capability provides for the process by which one customer premises alerts another customer premises on the same service with which it wishes to communicate.

(10) Reserved for Future Use

(11) Reserved for Future Use

(12) DAL Options

(a) DAL Improved Voice Transmission

(i) Improved two-wire voice transmission

(b) Other Options

Certain other options associated with DAL services are either Line Termination or Common Switching optional features as defined in Section 6 preceding.

[1] Effective September 9, 2020, this Service will no longer be available for purchase by new or existing customers, and service agreements may no longer be renewed. In addition, requests to move, add or change existing service arrangements will not be accepted. Following the expiration of a customer's existing term agreement, service will be provided on a month-to-month basis at the applicable monthly extension rates until the service is discontinued. AT&T currently plans to discontinue this Service on or after June 30, 2024. (N)

7. Special Access Services (Cont'd)

7.2 Service Descriptions (Cont'd)

7.2.3 Direct Analog Service[1] (Cont'd) (N)

(D) Optional Features and Functions (Cont'd)

(13) Line-Powered Data Station Termination Unit (DST)

Line-powered DSTs are available at customer-designated premises in lieu of commercial-powered DSTs. This option is available on new and existing channels with two-wire or four-wire, two-point or multi-point channels.

(14) DS0 Fiber Hub Cross-Connection

An arrangement to cross-connect DS0 (Direct Analog to Direct Analog) terminations at all designated Fiber Hub locations (described in 7.4.10 following).

[1] Effective September 9, 2020, this Service will no longer be available for purchase by new or existing customers, and service agreements may no longer be renewed. In addition, requests to move, add or change existing service arrangements will not be accepted. Following the expiration of a customer's existing term agreement, service will be provided on a month-to-month basis at the applicable monthly extension rates until the service is discontinued. AT&T currently plans to discontinue this Service on or after June 30, 2024. (N)

7. Special Access Service (Cont'd)

7.2 Service Descriptions (Cont'd)

7.2.3 Direct Analog Service[1] (Cont'd) (N)

(E) The following table shows the technical specifications packages with which the optional features and functions are available.

	Available with Technical Specifications Package VG-												
	C	**1**	**2**	**3**	**4**	**5**	**6**	**7**	**8**	**9**	**10**	**11**	**12**
C-Type Conditioning	X					X	X	X	X	X	X		
Central Office Bridging Capability	X		X			X	X				X	X	X
Central Office Multiplexing	X						X						
Code Select Signaling Arrangement	X		X										
Customer Specified Premises Receive Level	X		X	X				X	X	X			
Data Capability	X						X	X			X		
Improved Attenuation Distortion	X					X	X	X	X	X	X		
Improved Envelope Delay Distortion	X					X	X	X	X	X	X		
Improved Termination	X	X	X	X	X	X	X	X	X	X	X	X	X
Improved Return Loss For Effective Two-Wire Transmission	X		X	X				X					
Sealing Current Conditioning	X					X	X				X		
Signaling Capability	X	X	X	X				X	X	X			

[1] Effective September 9, 2020, this Service will no longer be available for purchase by new or existing customers, and service agreements may no longer be renewed. In addition, requests to move, add or change existing service arrangements will not be accepted. Following the expiration of a customer's existing term agreement, service will be provided on a month-to-month basis at the applicable monthly extension rates until the service is discontinued. AT&T currently plans to discontinue this Service on or after June 30, 2024. (N)

7. Special Access Service (Cont'd)

7.2 Service Descriptions (Cont'd)

7.2.3 Direct Analog Service[1] (Cont'd) (N)

(F) Four-Wire/Two-Wire Conversions

When a customer requests that an effective four-wire channel be terminated with a two-wire channel interface at the customer designated premises, a four-wire to two-wire conversion is required. The rate for the conversion is included as part of the basic Local Distribution Channel rate.

[1] Effective September 9, 2020, this Service will no longer be available for purchase by new or existing customers, and service agreements may no longer be renewed. In addition, requests to move, add or change existing service arrangements will not be accepted. Following the expiration of a customer's existing term agreement, service will be provided on a month-to-month basis at the applicable monthly extension rates until the service is discontinued. AT&T currently plans to discontinue this Service on or after June 30, 2024. (N) (N)

7. Special Access Service (Cont'd)

7.2 Service Descriptions (Cont'd)

7.2.4 Reserved For Future Use (T)

(D)

(D)

ACCESS SERVICE

7. Special Access Service (Cont'd)

7.2 Service Descriptions (Cont'd)

7.2.4 Reserved For Future Use (T)

(D)

(D)

7. Special Access Service (Cont'd)

7.2 Service Description (Cont'd)

7.2.5 Video Service

(A) Basic Channel Description

A Video Channel is a channel with one-way transmission capability for a standard 525 line/60 field monochrome, or National Television Systems Committee color, video signal and one or more associated audio signal(s) as described below. The Provision and the bandwidth of the associated audio signal(s) is a function of the network channel interface selected by the customer.

(1) TV Analog Video Service/1/ (C)

The bandwidth for TV Analog Video Service is either 30Hz to 4.5MHz or 30Hz to 6.6MHz. The associated audio signal(s) may be either diplexed or provided as one or two separate channels. TV Analog Video Service channels are provided between a customer designated premises, between a customer designated premises and a Telephone Company Hub or between Telephone Company Video Hubs.

TV 1 Analog Video Service rate categories are composed of Local Distribution Channels (LDCs) for facilities between the customers' premises and serving wire center and Channel Mileage and Channel Mileage Terminations for interoffice facilities.

Daily, Monthly and Optional Payment Plan (OPP) rates are available for TV1 Analog Video Service LDCs as set forth in Section 7.5.5(A)(1) (a).

Daily, Monthly and OPP Channel Mileage (CM) and Channel Mileage Termination (CMT) rates are available for TV1 Analog Service interoffice transport as set forth in Sections 7.5.5(A)(2)(a) and 7.5.5(A)(3)(a). Hourly rates are also available for TV1 Analog Video interoffice transport between Telephone Company video hubs as set forth in Sections 7.5.5(A)(2)(b) and 7.5.5(A)(3)(b).

TV 1 Analog Video customers may upgrade to 270 Mbps or higher video services without incurring termination liability charges, subject to the following conditions:

(1) The customer must issue a disconnect order for the existing TV1 Analog Video Service and place a service order for the new higher speed video service at the same locations such that there is no more than 60 days overlap between the two services.
(2) The same locations must be utilized for the new higher-speed video service.
(3) The customer must subscribe to a new OPP term that is greater than or equal to the remaining months in the existing term for the lower speed service.
(4) The existing TV1 Analog Video Service must have been in service for a minimum period of 15 months for a 3-year term, or 18 months for a 5-year term.
(5) Nonrecurring charges will apply where applicable.

/1/ Effective December 31, 2020, this Service will no longer be available for purchase by new or existing customers, and service agreements may no longer be renewed. In addition, requests to move, add, or change existing service arrangements will not be accepted. Following the expiration of a customer's existing term agreement, service will be provided on a month-to-month basis at the applicable Monthly rate until the service is discontinued. AT&T currently plans to discontinue this Service on or after December 31, 2021. (N) (N)

ACCESS SERVICE

7. Special Access Service (Cont'd)

7.2 Service Description (Cont'd)

7.2.5 Video Service (Cont'd)

(A) Basic Channel Description (Cont'd)

(2)

7. Special Access Service (Cont'd)

7.2 Service Description (Cont'd)

7.2.5 Video Service (Cont'd)

(A) Basic Channel Description (Cont'd)

ACCESS SERVICE

7. Special Access Service (Cont'd)

7.2 Service Description (Cont'd)

7.2.5 Video Service (Cont'd)

(A) Basic Channel Description (Cont'd)

(4) Reserved for Future Use

ACCESS SERVICE

7. Special Access Service (Cont'd)

7.2 Service Description (Cont'd)

7.2.5 Video Service (Cont'd)

(A) Basic Channel Description (Cont'd)

(4) Reserved for Future Use

ACCESS SERVICE

7. Special Access Service (Cont'd)

7.2 Service Description (Cont'd)

7.2.5 Video Service (Cont'd)

(A) Basic Channel Description (Cont'd)

(4) Reserved for Future Use

ACCESS SERVICE

7. Special Access Service (Cont'd)

7.2 Service Description (Cont'd)

7.2.5 Video Service (Cont'd)

(A) Basic Channel Description (Cont'd)

(5) Reserved for Future Use

7. Special Access Service

7.2 Service Descriptions (Cont'd)

7.2.5 Video Service (Cont'd)

(A) Basic Channel Description (Cont'd)

(6) Serial Component Video Service (SCVS)

SCVS is a standards based serial digital video transport for the limited purpose of providing one-way transport of high quality digital video signals and audio signals.

The following network interfaces are supported:

(a) ANSI/Society of Motion Picture and Television Engineers (SMPTE 259M);

(b) Serial Data Transport Interface (SDTI SMPTE 305M); and

(c) Digital Video Broadcasting-Asynchronous Serial Interface (DVB-ASI).

The customer is responsible for combining multiple MPEG video program stream(s) into a transport stream and encapsulating this into a 270 Mbps DVB-ASI format.

The bit rate for SCVS Standard is 270 Mbps. One to six audio signal(s) may be provided at 20 kHz.

Serial Component Video Service is available on point-to-point basis, or between a customer premises and a Telephone Company hub location. The technical specifications for SCVS video transport are described in Technical Reference AM-TR-NIS-000137.

SCVS may also provide an Optional termination at 45 Mbps. This option provides one way video transport of high quality 4:2:2 component ANSI/Society of Motion Picture and Television Engineers (SMPTE) 259 M video signals. One (1) to four (4) audio signal may be provided at 20 kHz, within the 45 Mbps bitstream.

Where facilities for SCVS are not available, Special Construction charges, as described in AT&T Illinois Guidebook, Part 2, Section 5, may apply.

7. Special Access Service

7.2 Service Descriptions (Cont'd)

7.2.5 Video Service (Cont'd)

(A) Basic Channel Description (Cont'd)

(6) Serial Component Video Service (SCVS) (Cont'd)

SCVS rate categories are composed of Standard/Optional Local Distribution Channels (LDCs) for facilities between the customers' premises and serving wire center, Channel Mileage and Channel Mileage Terminations for interoffice facilities and Optional Features and Functions. Monthly and Optional Payment Plan (OPP) recurring rates are available for SCVS LDCs as set forth in Section 7.5.5(F)(1)(a).

Monthly and OPP recurring Channel Mileage Termination (CMT) and Channel Mileage (CM) rates are available for SCVS interoffice transport as set forth in Sections 7.5.5(F)(2) and 7.5.5(F)(3).

The Video Regenerator option is available with SCVS at the rate set forth in Section 7.5.5(F)(4)(a).

/1/ Material formerly appeared on 2nd Revised Sheet 259.5 of this Tariff.

ACCESS SERVICE

7. Special Access Service (Cont'd)

7.2 Service Descriptions (Cont'd)

7.2.5 Video Service (Cont'd)

(B) Technical Specifications Packages

	Package TV		
Parameter	**C***	**1**	**2**
Amplitude vs. Frequency Response	X		
Chrominance/Luminance Inequalities			
Gain	X	X	X
Delay	X	X	X
Chrominance/Luminance Intermodulation	X		
Chrominance Nonlinear Gain	X		
Chrominance Nonlinear Phase	X		
Crosstalk	X		X
Differential Gain	X	X	X
Differential Phase	X	X	X
Dynamic Gain (picture and sync signal)	X		
Field-Time Distortion	X	X	X
Gain/Frequency Distortion	X	X	X
Gain Stability	X	X	X
Insertion Gain	X	X	X
Line-Time Distortion	X	X	X
Long-Time Distortion	X	X	X

* The desired parameters are selected by the customer from the list of available parameters.

Material formerly appeared in Original Page 259.3.

ACCESS SERVICE

7. Special Access Service (Cont'd)

7.2 Service Description (Cont'd

7.2.5 Video Service (Cont'd)

(B) Technical Specifications Packages (Cont'd)

Parameter	Package TV - C*	1	2
Luminance Nonlinearity	X		
Luminance Signal/CCIR Weighted Noise	X	X	X
Short-Time Distortion 2 T Pulse	X	X	X
T - Bar Ringing	X	X	X
Signal/15kHz Flat Weighted Noise	X	X	X
Signal/Low Frequency Noise	X		
Stereo Gain Difference	X	X	
Stereo Phase Difference	X	X	
Total Harmonic Distortion	X	X	X
Transient Sync Signal Non-Linearity	X		
Video/Audio Delay Difference	**X**		

The technical specifications are delineated in Technical Reference TR-NPL-000338**,** AM-TR-NTP-000119, AM-TR-NIS-000130, AM-TR-NIS-000131, AM-TR-NIS-000137 and associated Addendum**.**

(C) Network Channel Interfaces

The following network channel interfaces (CIs) define the bandwidth and the provision of the audio signal(s) associated with a Video channel:

CI	Audio Bandwidth	Provision
2TV6-1	15kHz	1 Channels, diplexed
2TV6-2	15kHz	2 Channels, diplexed
2TV7-1	15kHz	1 Channel, diplexed
2TV7-2	15kHz	2 Channels, diplexed

* The desired parameters are selected by the customer from the list of available parameters.

7. Special Access Service (Cont'd)

7.2 Service Description (Cont'd)

7.2.5 Video Service (Cont'd)

(C) Network Channel Interfaces (Cont'd)

CI	Audio Bandwidth	Provision
06TV6.15	15kHz	1 or 2 Channels, diplexed
10TV6.15A	15kHz	1 to 4 Channels, diplexed
02WV6.J.O-		1 Channel, RF
02WV6.J.-O		1 Channel, RF
01WVF.L.O-	50Hz to 15kHz	1, 2 or 4 Channels
01WVF.L.-O	50Hz to 15kHz	1, 2 or 4 Channels
02WV6.K	No Audio	
02TD6.20.0-	20kHz	1 to 6 Channels
02TD6.20.-0	20kHz	1 to 6 Channels

(D) Optional Features and Functions

(1) Reserved for Future Use

(2) Reserved For Future Use

ACCESS SERVICE

7. Special Access Service (Cont'd)

7.2 Service Description (Cont'd)

7.2.5 Video Service (Cont'd)

(D) Optional Features and Functions (Cont'd)

(3) Reserved for Future Use

(4) Automatic Protection Switching (APS)

The Automatic Protection Switching option is available between two like point to point video services. The customer designates one video service as the primary working service and the other video service as the secondary protect service. APS automatically switches from the primary working service to the secondary protect service when light is not detected on the fiber pair associated with primary working service.

(5) TV Analog Video Optional 3rd or 4th Audio Channel

A third and fourth associated audio channel may be provided over either a diplexed channel or provided as one or two separate channels

7. Special Access Service

7.2 Service Description (Cont'd)

7. Special Access Service

7.2 Service Description (Cont'd)

7. Special Access Service

7.2 Service Description (Cont'd)

7. Special Access Service

7.2 Service Description (Cont'd)

7. Special Access Service (Cont'd)

7.2 Service Descriptions (Cont'd)

7.2.6 Reserved for Future Use

7. Special Access Service (Cont'd)

7.2 Service Descriptions (Cont'd)

7.2.6 Wideband Analog Service* (Cont'd)

(B) Technical Specifications Packages (Cont'd)

7. Special Access Service (Cont'd)

7.2 Service Descriptions (Cont'd)

7. Special Access Service (Cont'd)

7.2 Service Descriptions (Cont'd)

7. Special Access Service (Cont'd)

7.2 Service Descriptions (Cont'd)

7.2.7 Reserved for Future Use

7. Special Access Service (Cont'd)

7.2 Service Descriptions

7.2.7 Reserved for Future Use

7. Special Access Service (Cont'd)

7.2 Service Descriptions

7. Special Access Service (Cont'd)

7.2 Service Descriptions

7. Special Access Service (Cont'd)

7.2 Service Descriptions

7. Special Access Service (Cont'd)

7.2 Service Descriptions (Cont'd)

7.2.9 Base Rate Services, DS1 Service and DS3 Services

(A) Basic Channel Description

(1) General

Base Rate channels, DS1 channels, and DS3 channels provide digital transmission at the discrete bit rates of 2.4 Kbps, 4.8 Kbps, 9.6 Kbps, 19.2 Kbps, 56.0 Kbps, 64.0 Kbps, and 1.544 Mbps and 44.736 Mbps, with timing provided by the Telephone Company through the Telephone Company's facilities to the customer in the received bit stream. These services provide digital transmission with the following characteristics:

- Base Rate Services provide channels operating at terminating bit rates of 2.4 Kbps, 4.8 Kbps, 9.6 Kbps, 19.2 Kbps and 56.0 Kbps, and 64.0 Kbps;

- DS1 Service provides channels operating at the terminating bit rate of 1.544 Mbps; and,

- DS3 Service provides channels operating at the terminating bit rate of 44.736 Mbps.

- Base Rate, DS1 and DS3 channels may be used to connect:

- a customer designated premises to another customer designated premises, or;

- a customer designated premises to a Telephone Company location where bridging, cross-connection or multiplexing functions are performed; or an ARS system location.

- two NRS system locations may be connected via Base Rate, DS1 or DS3 Channel Mileage and Channel Mileage Terminations to interconnect Base Rate, DS1 or DS3 channels included in the customer's database for the Network Reconfiguration Service (described in 7.4.14(B)).

7. Special Access Service

7.2 Service Descriptions (Cont'd)

7.2.9 Base Rate Services, DS1 Service and DS3 Service (Cont'd)

(A) Basic Channel Description (Cont'd)

(1) General (Cont'd)

Digital transmission paths for Base Rate Services, DS1 Service, and DS3 Service are differentiated by bit rate, and the quality of transmission is as delineated by the Channel Interface definitions in the Technical Reference Publications cited in Section 7.2 preceding. Customer options are available to customize the channels.

Base Rate Services, DS1 Service and DS3 Service channels may be connected to any other Base Rate Service, DS1 Service or DS3 Service at a Telephone Company Hub, and to certain other Special Access services as described in Section 7.2.9(B)(4)(f) following. When a customer orders service to a Telephone Company Hub, it is the customer's responsibility to assure that the channels connected at the Hub are compatible. Compatible network channel interfaces for interstate Special services are listed in Section 7.3 following.

When service is provided between a customer designated premises and a Telephone Company Fiber Hub location, listed in 7.4.10 following, that service is considered to end at the Fiber Hub location. Performance of the service is measured between the customer designated premises and the Fiber Hub location. Interconnection at the Fiber Hub is limited to DS1 Service and DS3 Service channels terminating at speeds of 1.544 and 44.736 Mbps, only (not available with DS1 - 128.0, 256.0 and 384.0 Kbps transport).

When service is provided between a customer designated premises and an NRS/1/ system location, that service is considered to end at the NRS system location. Performance of the service is measured between the customer designated premises and the NRS system location. When service is provided between two NRS system locations, that service is considered to end at the NRS system locations, and performance of the service is measured between these two locations. Interconnection at the NRS system location is limited to DS3, DS1 (1.544 Mbps and 128 - 384 Kbps) and Base Rate Services (2.4 - 64 Kbps) channels.

/1/ Effective December 5, 2018, Network Reconfiguration Service (NRS) will no longer be available for purchase by new or existing customers, and NRS service agreements may no longer be renewed. Effective July 31, 2022, the Telephone Company will no longer accept new requests for physical changes to existing service arrangements including the upgrade or downgrade of access/port speed, installation of new service, or moves to different service addresses.

ACCESS SERVICE

7. Special Access Service (Cont'd)

7.2 Service Descriptions (Cont'd)

7.2.9 Base Rate Services, DS1 Service, and DS3 Services (Cont'd)

(A) Basic Channel Description (Cont'd)

(1) General (Cont'd)

The customer may provide the Network Channel Terminating Equipment associated with Base Rate, DS1 and DS3 Local Distribution Channels at the customer premises. In The interim program for interconnection of such equipment is set forth in Technical Reference PUB as No. 1.

At the option of the customer, DS3 service may be provided by means of an optical channel interface at the customer's premises. When the optical interface is selected, the customer must provide the Optical Line Termination associated with the service channels at the customer premises. Interconnection of such equipment is limited to those interfaces set forth in 7.2.9(B)(1) following and described in Technical Reference AM TR TMO-000072.

(2) Connection with Other Network Services

Base Rate Services, DS1 Service and DS3 Service may be ordered to allow connections between the customer designated premises and the wire center which provides other network services.

(a) Dedicated Access Line[1] (DAL)

(i) DELETED[2] (C)

(D)

(D)

(1) Effective September 9, 2020, this Service will no longer be available for purchase by new or existing customers, and service agreements may no longer be renewed. In addition, requests to move, add or change existing service arrangements will not be accepted. Following the expiration of a customer's existing term agreement, service will be provided on a month-to-month basis at the applicable monthly extension rates until the service is discontinued. AT&T currently plans to discontinue this Service on or after June 30, 2024.

(2) Pursuant to Section 2.1.4, DS1 Dedicated Access Line ("DS1 DAL") has been discontinued and is no longer offered from this publication as April 1, 2022. The Company will make customer-specific accommodations to the extent required by 220 ILCS 5/13-406.1. (N) (N)

7. Special Access Service (Cont'd)

7.2 Service Descriptions (Cont'd)

7.2.9 Base Rate Services, DS1 Service and DS3 Services (Cont'd)

(A) Basic Channel Description (Cont'd)

(2) Connection with Other Network Services

(a) Dedicated Access Line (DAL)[1] (Cont'd) (N)

(ii) Base Rate Service (56 Kbps) DAL

A Dedicated Access Line[1] can be provided as a Base Rate Service (56 Kbps) transmission path between a customer designated premises and a Public Switched Digital Service (PSDS) serving office. A Base Rate Service (56 Kbps) DAL[1] is available only when the PSDS serving office is an appropriately equipped digital switch. (N) (N)

(B) Channel Configuration

(1) Base Rate, DS1, and DS3 Local Distribution Channels

Base Rate, DS1, and DS3 channels consist of Local Distribution Channels (LDCs), interoffice transport and optional features and functions.

Base Rate Services, DS1 Service and DS3 Local Distribution Channels provide digital interconnection between the Telephone Company Serving Wire Center (SWC) and the customer. The customer may select from a variety of channel types that define the termination at the customer location. Each type has its own bit rate and transmission characteristics defined by the network channel interface codes. The actual bit rate and/or framing format is a function of the network channel interface selected by the customer. For example, Access to Extended Superframe (BSE - Extended Superframe Conditioning) extends the customer's DS1 framing structure from 12 to 24 frames. This framing format is available at no additional charge.

[1] Effective September 9, 2020, this Service will no longer be available for purchase by new or existing customers, and service agreements may no longer be renewed. In addition, requests to move, add or change existing service arrangements will not be accepted. Following the expiration of a customer's existing term agreement, service will be provided on a month-to-month basis at the applicable monthly extension rates until the service is discontinued. AT&T currently plans to discontinue this Service on or after June 30, 2024. (N) (N)

7. Special Access Service

7.2 Service Descriptions (Cont'd)

7.2.9 Base Rate Services, DS1 Service and DS3 Service (Cont'd)

(B) Channel Configuration (Cont'd)

(1) Base Rate Services, DS1 Service and DS3 Service Local Distribution Channels (Cont'd)

The following types of LDCs are available:

Terminating Bit Rate	Loop Format	Data Transmission Format	Channel Interface
2.4 Kbps	4-Wire	Synchronous Serial	DU-24
4.8 Kbps	4-Wire	Synchronous Serial	DU-48
9.6 Kbps	4-Wire	Synchronous Serial	DU-96
19.2 Kbps	4-Wire	Synchronous Serial	DU-19
56.0 Kbps	4-Wire	Synchronous Serial	DU-56
56.0 Kbps (DAL)	2-Wire	Synchronous Serial	DU-16
56.0 Kbps (DAL)	4-Wire	Synchronous Serial	DU-56
64.0 Kbps	4-Wire	Synchronous Serial	DU-64
1.544 Mbps	4-Wire	Isochronous Serial	DS-15
44.736 Mbps	4-Wire	Isochronous Serial	DS-44
44.736 Mbps	4-Wire	Isochronous Serial	FC-56 or FC-12

When DS3 Service is provided using an optical channel interface, the customer is responsible for providing the Optical Line Termination (OLT) at the customer's premises. The OLT supplied at the customer premises must be compatible with the OLT used by the Telephone Company in the Serving Wire Center. The Telephone Company will work cooperatively with the customer to select compatible OLTs which conform to the requirements set forth in Technical Reference Publication AM TR TMO-000072.

All LDCs comprising a channel must have the same terminating bit rate unless multiplexing is performed at a Telephone Company Hub location.

Only certain LDC to LDC connections with unlike bit rates are allowable using multiplexing. The allowable multiplexing is described in Sections 7.2.9(B)(4)(f) and 7.4.7 following.

When DS1 LDCs are used in conjunction with DS1 128.0, 256.0 or 384.0 Kbps transport without multiplexing, the usable bandwidth available to the customer is 128.0, 256.0 or 384.0 Kbps, respectively.

7. Special Access Service (Cont'd)

7.2 Service Descriptions (Cont'd)

7.2.9 Base Rate Services, DS1 Service and DS3 Service (Cont'd)

(B) Channel Configuration (Cont'd)

(2) Interoffice Transport

Interoffice Transport facilities comprised of Channel Mileage Terminations (CMT), described in Section 7.1.2(B) preceding, and Channel Mileage (CM), described in Section 7.1.2 preceding, provide the transmission paths between the Serving Wire Centers associated with two customer designated premises, between a Serving Wire Center associated with a customer premises and a Telephone Company Hub location or an NRS/1/ System Location or between two Telephone Company NRS system locations for NRS associated services. When NRS system locations are within the same wire center only the appropriate port charges will apply. Three interoffice transport types are available; Base Rate transport which supports bit rates from 2.4 Kbps through 64.0 Kbps, DS1 transport at bit rates of 1.544 Mbps, 128.0 Kbps, 256.0 Kbps and 384.0 Kbps and DS3 transport at the 44.736 Mbps bit rate.

Base Rate 2.4 Kbps through 64.0 Kbps LDCs are interconnected to Base Rate transport/2/ while DS1 LDCs are interconnected to DS1 transport (1.544 Mbps, 128.0 Kbps, 256.0 Kbps or 384.0 Kbps) and DS3 SCs to DS3 transport. Additionally, higher speed LDCs may be cross-connected to lower speed transport using optional multiplexing features delineated in Section 7.2.9(B)(4)(f) following.

(3) Optional Features and Functions

The following table shows the technical specifications packages with which the optional features and functions are available. Not all of the optional features and functions described in this section apply to all of the services. The following matrix shows the Optional Features and Functions by bit rate that a customer may select. The specific Optional Features and Functions are described in Section 7.2.9(B)(4), a through i, following. Except as specified in 7.2.9(B)(4)(f)(2) following, when DS1 LDCs are used in conjunction with DS1 128.0, 256.0 or 384.0 Kbps transport, no Optional Features and Functions are available.

/1/ Effective December 5, 2018, Network Reconfiguration Service (NRS) will no longer be available for purchase by new or existing customers, and NRS service agreements may no longer be renewed. Effective July 31, 2022, the Telephone Company will no longer accept new requests for physical changes to existing service arrangements including the upgrade or downgrade of access/port speed, installation of new service, or moves to different service addresses.

/2/ Base Rate Interoffice Transport provides usable bandwidths to match the customer's LDC Bit Rate for Base Rate services operating at terminating speeds up to and including 64.0 Kbps.

ACCESS SERVICE

7. Special Access Service (Cont'd)

7.2 Service Descriptions (Cont'd)

7.2.9 Base Rate Services, DS1 Service and DS3 Service (Cont'd)

(B) Channel Configuration (Cont'd)

(3) Optional Features and Functions (Cont'd)

Base Rate Services, DS1 Service and DS3 Service
(Application of Optional Features and Functions by Terminating Speeds)

	2.4 Kbps	4.8 Kbps	9.6 Kbps	56.0 kbps	19.2 Kbps	64.0 Kbps	1.544 Kbps		44.736 Kbps
	PACKAGES								
Parameter	DA-1	DA-2	DA-3	DA-4	DA-5	DA-6	HC-0	HC-1	HC-3
Central Office, Bridging Capability	X	X	X	X					
Secondary Channel	X	X	X	X					
Transfer Arrangement	X	X	X	X				X	
Interconnection - Central Office Multiplexing									
- DS3 to DS1									X
- DS1 to Voice/Base Rate/128.0, 256.0, 384.0 Kbps Transport								X	
Fiber Hub Cross-Connection/1/								X	
NRS Terminations/2/	X	X	X	X	X	X	X	X	X
Multiplexer Cross-Connection								X	X

/1/ Description of this optional feature and function is delineated in Section 7.4 following.
/2/ Description of the Network Reconfiguration Service (NRS) is delineated in Section 7.2.9(B)(5) following.

7. Special Access Service (Cont'd)

7.2 Service Descriptions (Cont'd)

7.2.9 Base Rate Services, DS1 Service and DS3 Service (Cont'd)

(B) Channel Configuration (Cont'd)

(4) Optional Features and Functions

Application of these optional features and functions are delineated in Section 7.2.9(B)(3) preceding.

(a) Central Office Bridging Capability

This option is applicable to Base Rate channels operating at terminating speeds of 2.4, 4.8. 9.6 and 56.0 Kbps only. Central Office Bridging Capability allows for communications between three or more circuit termination locations.

(b) Secondary Channels

The Secondary Channel feature is provided in conjunction with Base Rate channels operating at terminating speeds of 2.4, 4.8, 9.6 and 56.0 Kbps (considered the primary channel). A secondary channel provides a companion digital channel over the same facility used to provide the primary channel, but at a lower bit rate. The secondary and primary channels operate independently of each other, over the same facilities, and must be co-terminated in common customer equipment as described in Technical References Publications, cited in Section 7.2 preceding. Secondary channel is offered as a two-point or multipoint service in Telephone Company locations where facilities are available. The addition of the secondary channel option to an existing Base Rate Services will be treated as a disconnect of the existing service and an installation of a new service including the secondary channel.

* Central Office Bridging Capability and Secondary Channels are not available with 56.0 Kbps DAL.

7. Special Access Service (Cont'd)

7.2 Service Descriptions (Cont'd)

7.2.9 Base Rate Services, DS1 Service and DS3 Service (Cont'd)

(B) Channel Configurations (Cont'd)

(4) Optional Features and Functions (Cont'd)

(b) Secondary Channels (Cont'd)

The technical specifications for this feature are described in Technical Publications, cited in Section 7.2 preceding. The bit rates of the secondary channel are shown in the following table:

Base Rate Service Transmission Speed		Secondary Channel Transmission Speed	
2.4	Kbps	133	Bps
4.8	Kbps	266	Bps
9.6	Kbps	533	Bps
56.0	Kbps	2.66	Kbps

(c) Clear Channel Capability

An arrangement which allows a customer to transport 1.536 Mbps of information on a 1.544 Mbps line rate with no constraint on the quantity or sequence of one and zero bits.

Clear Channel Capability is provided for both point to point and channelized DS1 service and is a required option for DS1 service when 64 Kbps channels are multiplexed onto the DS1 service.

Where appropriate facilities are not immediately available, negotiated order intervals may apply. The technical specifications for this feature are as described in Technical Reference Publications, cited in Section 7.2 preceding.

7. Special Access Service (Cont'd)

7.2 Service Descriptions (Cont'd)

7.2.9 Base Rate Services, DS1 Service and DS3 Service (Cont'd)

(B) Channel Configuration (Cont'd)

(3) Optional Features and Functions (Cont'd)

(d) Section Not in Use

(e) Transfer Arrangement

An arrangement that affords the customer an additional measure of flexibility in the use of their access channel(s). The arrangement can be utilized to transfer a leg of a Special Access Service to either the spare or working channel that terminates in either the same or a different customer premises. A key activated or dial-up control service is required to operate the transfer arrangement. A spare channel, if required, is not included as part of the option.

ACCESS SERVICE

7. Special Access Service

7.2 Service Descriptions (Cont'd)

7.2.9 Base Rate Services, DS1 Service and DS3 Service (Cont'd)

(B) Channel Configuration (Cont'd)

(4) Optional Features and Functions (Cont'd)

(f) Interconnection - Central Office Multiplexing

(1) DS3 to DS1 Multiplexing

An arrangement that converts a DS3 channel operating at a terminating speed of 44.736 Mbps to 28 DS1 channels operating at a terminating speed of 1.544 Mbps using digital time division multiplexing (available with 128.0, 256.0 and 384.0 Kbps and 1.544 Mbps transport).

(2) DS1 to Voice/Base Rate/ 128.0, 256.0 and 384.0 Kbps Transport Multiplexing

An arrangement that converts a DS1 (1.544 Mbps only) channel to 24 channels for use with Direct Analog Service[1], Base Rate Service, and 128.0, 256.0 and 384.0 Kbps Transport Services (multiple channels are required to provide individual 128.0, 256.0 or 384.0 Kbps channels). A channel of this DS1 to the Hub can also be used for Dedicated Network Access Line, or Dedicated Access Line[1] Services. (D) (D) (D)

[1] Effective September 9, 2020, this Service will no longer be available for purchase by new or existing customers, and service agreements may no longer be renewed. In addition, requests to move, add or change existing service arrangements will not be accepted. Following the expiration of a customer's existing term agreement, service will be provided on a month-to-month basis at the applicable monthly extension rates until the service is discontinued. AT&T currently plans to discontinue this Service on or after June 30, 2024. (D) (D)

ACCESS SERVICE

7. Special Access Service

7.2 Service Descriptions (Cont'd)

7.2.9 Base Rate Services, DS1 Service and DS3 Service (Cont'd)

(B) Channel Configuration (Cont'd)

(4) Optional Features and Functions (Cont'd)

(g) Fiber Hub Cross-connection

An arrangement to cross-connect DS1 Service, (excluding DS1 - 128.0, 256.0 and 384.0 Kbps Transport) DS3 Service, or Base Rate Service terminations to another service of the same speed at a designated Fiber Hub location. The customer must purchase service to the Fiber Hub from his designated premises.

ACCESS SERVICE

7. Special Access Service (Cont'd)

7.2 Service Descriptions (Cont'd)

7.2.9 Base Rate Services, DS1 Service and DS3 Service (Cont'd)

(B) Channel Configuration (Cont'd)

(4) Optional Features and Functions (Cont'd)

(h) NRS[2] Termination

An arrangement to connect a DS3, DS1 or Base Rate Local Distribution Channel or interoffice transport facility to a Network Reconfiguration System (NRS) location to allow the connected DS3, DS1, Base Rate, DS3 or DS1 service to be reconfigured with NRS. All DS3, DS1 and Base Rate Services that are to be included in a customer's NRS database must be terminated on an NRS system location. Only services that are included in a customer's NRS database may utilize the ANRS Termination feature.

(i) Shared Network Arrangement[1]

(1) A Shared Network Arrangement is a service offering that enables a customer (the "Service User") to connect subtending services to the multiplexed DS3 or DS1 service of another customer (the "Host Subscriber"), with the Telephone Company maintaining separate records and billing for each. Each customer will be billed for those rate elements associated with their own portion of the service configuration. Under no circumstances will the rates or charges for individual rate elements be split. This offering is limited to service configurations where a Service User obtains either subtending Direct Analog[3] or Base Rate circuits from a Host's multiplexed DS1 service, or DS1 circuits from a Host's multiplexed DS3 service. (N)

(2) Under the Shared Network Arrangement, the Telephone Company may share record information with the Host Subscriber pertaining to the services of other users of the shared network. Such disclosure will be under the sole

(1) Effective 06/01/06, this regulation is limited to existing customers. For new customers purchasing Shared Network Arrangement, terms and conditions set forth in Section 5.2 (A), will apply.

(2) Effective December 5, 2018, Network Reconfiguration Service (NRS) will no longer be available for purchase by new or existing customers, and NRS service agreements may no longer be renewed. Effective July 31, 2022, the Telephone Company will no longer accept new requests for physical changes to existing service arrangements including the upgrade or downgrade of access/port speed, installation of new service, or moves to different service addresses.

(3) Effective September 9, 2020, this Service will no longer be available for purchase by new or existing customers, and service agreements may no longer be renewed. In addition, requests to move, add or change existing service arrangements will not be accepted. Following the expiration of a customer's existing term agreement, service will be provided on a month-to-month basis at the applicable monthly extension rates until the service is discontinued. AT&T currently plans to discontinue this Service on or after June 30, 2024. (N)

7. Special Access Service (Cont'd)

7.2 Service Descriptions (Cont'd)

7.2.9 Base Rate Services, DS1 Service and DS3 Service (Cont'd)

(B) Channel Configuration (Cont'd)

(4) Optional Features and Functions (Cont'd)

(i) Shared Network Arrangement[1] (Cont'd)

(2) (Cont'd)

discretion of the Telephone Company as is necessary to perform billing reconciliations and/or other functions required in connection with maintaining account records.

(3) Section 7.4.11 contains rate regulations specific to Shared Network Arrangements.

(j) Multiplexer Cross-Connection (MCC)

An arrangement that allows one channel of a multiplexed DS1 or DS3 Service to be connected to one channel of the same bit rate and like signaling of another multiplexed DS1 or DS3 Service.

The lesser speed channel may be a Direct Analog[2] Service between two DS1 multiplexers, or a Base Rate Service provided at 64 Kbps of bandwidth between two DS1 multiplexers, or a DS1 Service between two DS3 multiplexers. (N)

MCC will be provided at all Telephone Company locations where multiplexing is performed or between two Telephone Company locations where multiplexing is performed.

[1] Effective 06/01/06, this regulation is limited to existing customers. For new customers purchasing Shared Network Arrangement, terms and conditions set forth in Section 5.2 (A), will apply.

[1] Effective September 9, 2020, this Service will no longer be available for purchase by new or existing customers, and service agreements may no longer be renewed. In addition, requests to move, add or change existing service arrangements will not be accepted. Following the expiration of a customer's existing term agreement, service will be provided on a month-to-month basis at the applicable monthly extension rates until the service is discontinued. AT&T currently plans to discontinue this Service on or after June 30, 2024. (N) (N)

7. Special Access Service (Cont'd)

7.2 Service Descriptions

7.2.9 Base Rate Services, DS1 Service and DS3 Service (Cont'd)

(B) Channel Configuration (Cont'd)

(4) Optional Features and Functions

(k) Shared Facility Credit/Shared Facility Channel Service

Shared Facility Credit (SFC) is an option available to customers of DS3 Special Access Service who allow the Telephone Company use of their provided DS3 service for the provision of Shared Facility Channel Service, as described following, to other Telephone Company customers. With SFC, the Telephone Company will provide a credit to the customer of the DS3 Special Access Service when the Telephone Company utilizes a portion of the DS3 Local Distribution Channel (LDC), associated DS3 to DS1 multiplexer, and, if appropriate, DS3 Channel Mileage Terminations (CMT) and Channel Mileage (CM) to provide Shared Facility Channel Service to another Telephone Company customer.

Shared Facility Channel Service provides a DS1 communications channel over SFC provisioned DS3 service between the DS3 customer's premises and the Telephone Company wire center location of the DS3 multiplexer. Shared Facility Channel Service must be connected to DS1 service at the DS3 multiplexer wire center.

Shared Facility Channel Service Charges as set forth in Section 7.5.9(B)(5)(j) will apply to the customer of the Shared Facility Channel Service for the Shared Facility Local Distribution Channel and, if appropriate, Shared Facility Channel Mileage Terminations and Channel Mileage provided over the DS3 Special Access Service subject to the SFC.

7. Special Access Service (Cont'd)

7.2 Service Descriptions

7.2.9 Base Rate Services, DS1 Service and DS3 Service (Cont'd)

(B) Channel Configuration (Cont'd)

(4) Optional Features and Functions

(K) Shared Facility Credit/Shared Facility Channel Service (Cont'd)

The following diagram depicts a DS1 Service connected to a Shared Facility Channel Service (SFCS) provisioned over a Shared Facility Credit arranged DS3 Service.

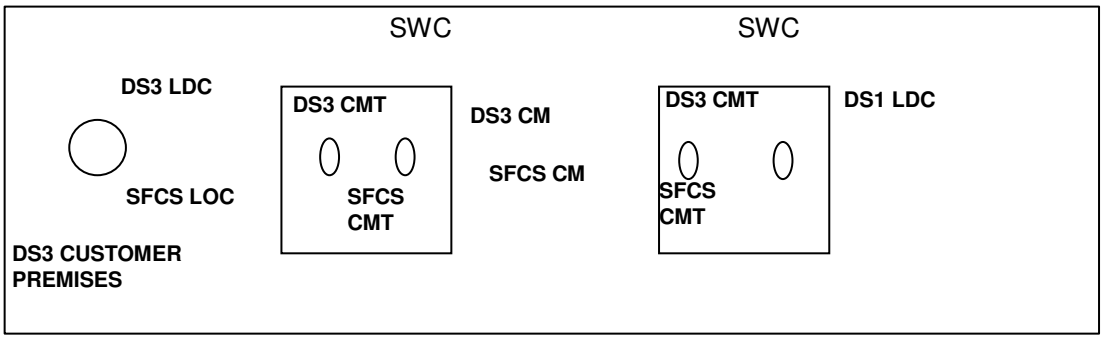

SWC	-	Serving Wire Center
LDC	-	Local Distribution Channel
CMT	-	Channel Mileage Termination
CM	-	Channel Mileage
MUX	-	DS3 to DS1 Multiplexer

Section 7.4.19 contains rate regulations specific to Shared Facility Credit/Shared Facility Channel Service arrangements.

(5) Network Reconfiguration Service (NRS)/1/

(A) General

Network Reconfiguration Service (NRS) gives customers the ability to reconfigure networks, via electronic cross-connections, comprised of DS3, DS1 and Base Rate channels connected at NRS system locations. Reconfiguration may be accomplished by placing an electronic request via a customer provided terminal or by calling a Telephone Company attendant.

/1/ Effective December 5, 2018, Network Reconfiguration Service (NRS) will no longer be available for purchase by new or existing customers, and NRS service agreements may no longer be renewed. Effective July 31, 2022, the Telephone Company will no longer accept new requests for physical changes to existing service arrangements including the upgrade or downgrade of access/port speed, installation of new service, or moves to different service addresses.

7. Special Access Service (Cont'd)

7.2 Service Description (Cont'd)

7.2.9 Base Rate Services, DS1 Service and DS3 Service (Cont'd)

(B) Channel Configuration (Cont'd)

(5) Network Reconfiguration Service (NRS) (Cont'd)[1]

(B) Service Description

Network Reconfiguration Service gives customers the ability to reconfigure their networks via cross-connections of their DS3, DS1 and Base Rate Service channels which are identified in a customer specific network database. The NRS system location provides an interface at the DS3 (44.736 Mbps), DS1 (1.544 Mbps) and Base Rate (2.4 - 64 Kbps) levels. The customer may specify cross-connections at the DS3, channelized DS3, DS1, channelized DS1, or Base Rate level.

Customer access to NRS may be made directly by the customer utilizing customer provided terminal equipment on the customer's premises in conjunction with a Dedicated Network Access Link or dial-in line. Access is also available through a Telephone Company attendant reached by a dial access telephone line.

NRS will give the customer the ability to make changes in the individual channel segments of their network. Customers may reconfigure DS3, DS1 or Base Rate or DS1 service. Customers may also reconfigure Direct Analog[2] channels that are channels of a reconfigurable channelized DS1 service. To utilize this capability, customers must order appropriate DS1 multiplexing in addition to the NRS Terminations at the DS1 level and the NRS service. (N)

NRS will be available on a continuous basis except for the performance of scheduled preventative and routine maintenance or scheduled software updates. The customer will be notified at least 24 hours in advance of any scheduled service interruptions.

NRS system locations are found in the National Exchange Carrier Association, Inc., Tariff F.C.C. No. 4.

[1] Effective December 5, 2018, Network Reconfiguration Service (NRS) will no longer be available for purchase by new or existing customers, and NRS service agreements may no longer be renewed. Effective July 31, 2022, the Telephone Company will no longer accept new requests for physical changes to existing service arrangements including the upgrade or downgrade of access/port speed, installation of new service, or moves to different service addresses.

[2] Effective September 9, 2020, this Service will no longer be available for purchase by new or existing customers, and service agreements may no longer be renewed. In addition, requests to move, add or change existing service arrangements will not be accepted. Following the expiration of a customer's existing term agreement, service will be provided on a month-to-month basis at the applicable monthly extension rates until the service is discontinued. AT&T currently plans to discontinue this Service on or after June 30, 2024. (N) (N)

ACCESS SERVICE

7. Special Access Service (Cont'd)

7.2 Service Description (Cont'd)

7.2.9 Base Rate Services, DS1 Service and DS3 Service (Cont'd)

(B) Channel Configuration (Cont'd)

(5) Network Reconfiguration Service (NRS) (Cont'd)/1/

(C) Technical Specifications

Services that are cross-connected by the Network Reconfiguration Service will not operate properly unless they have identical technical characteristics to ensure compatibility and proper operation. NRS customers are responsible for the compatibility of the services they choose to cross-connect.

If the Telephone Company determines that the technical characteristics of services selected for cross-connection by the customer are not compatible, they will advise the customer and give them the opportunity to change the order.

The Network Reconfiguration Service specifications are delineated in Technical Reference AM-TR-OAT-000064.

/1/ Effective December 5, 2018, Network Reconfiguration Service (NRS) will no longer be available for purchase by new or existing customers, and NRS service agreements may no longer be renewed. Effective July 31, 2022, the Telephone Company will no longer accept new requests for physical changes to existing service arrangements including the upgrade or downgrade of access/port speed, installation of new service, or moves to different service addresses.

7. Special Access Service (Cont'd)

7.2 Service Descriptions (Cont'd)

7.2.9 Base Rate Services, DS1 Service and DS3 Service (Cont'd)

(B) Channel Configuration (Cont'd)

(6) Technical Specifications Packages

The technical specifications for Base Rate Services, DS1 Service and DS3 Service are delineated in Technical References. Base Rate Services (DA1-5) are described in TR-NPL-000341, and Base Rate (DA6) as described in AM-TR-OAT-000070. DS1 (HC1) and DS3 (HC3) are described in TR-INS-000342 and AM-TR-TMO-000101. DS1 (HX) is described in AM-TR-TMO-000106.

The Telephone Company will provide a Base Rate channel to provide connectivity at terminating speeds from 2.4 Kbps through 64.0 Kbps with error-free second performance typified by a monthly average objective of 99.875 percent while the channel is in service. Such performance must be measured through a CSU equivalent which is designed, manufactured, and maintained to conform with the specifications contained in Technical Reference PUB AM-TR-OAT-000070. The overall performance of an individual circuit will depend upon the performance characteristics of data communications equipment that is provided and maintained by the customer as well as network conditions. Error-free second performance is provided to indicate typical circuit performance objectives, not as an assurance of performance on an individual circuit.

For a DS1 channel operating at a terminating bit rate of 1.544 Mbps (HC1), the Telephone Company will provide a channel capable of an error-free second performance of 99.75 percent over a continuous 24 hour period as measured at the 1.544 Mbps rate through a NCTE equivalent which is designed, manufactured and maintained to conform with the specifications in Technical Reference Publication PUB 62411. Additional transmission performance specifications are described in AM-TR-TMO-000101; all transmission performance specifications listed in this document replace any specifications contained in other DS1 or DS3 Technical References.

7. Special Access Service (Cont'd)

7.2 Service Descriptions (Cont'd)

7.2.9 Base Rate Services, DS1 Service and DS3 Service (Cont'd)

(B) Channel Configuration (Cont'd)

(7) Network Channel Interfaces

The network channel interfaces define the bit rates that are available for Base Rate, DS1 and DS3 channels operating at terminating speeds 2.4 Kbps, 4.8 Kbps, 9.6 Kbps, 19.2 Kbps, 56.0 Kbps, 64.0 Kbps, 1.544 Mbps and 44.736 Mbps. Network channel interfaces and codes are described in 7.3 following.

7. Special Access Service (Cont'd)

7.2 Service Descriptions (Cont'd)

7.2.10 Optical Carrier Network (OCN) Point-to-Point Service

(A) Basic Channel Description

(1) General

(a) Optical Carrier Network (OCN) Point-to-Point channels provide high speed synchronous optical fiber-based full duplex data transmission capabilities. These services provide optical data transmission with the following characteristics:

(i) OC-3/OC-3c provides channels operating at the terminating bit rate of 155.52 Mbps; and,

(ii) OC-12/OC-12c provides channels operating at the terminating bit rate of 622.08 Mbps.

(iii) OC-48/OC-48c provides channels operating at the terminating bit rate of 2488.32 Mbps.

(iv) OC-192/OC-192c provides channels operating at the terminating bit rate of 9953.28 Mbps;

(b) OC-3, OC-12, OC-48, and OC-192 channels may be used to connect the following:

(i) a customer designated premises to another customer-designated premises, without the add/drop multiplexing capability.

(ii) a customer designated premises to a Telephone Company location where add/drop multiplexing, or add/drop functions are performed.

(iii) a Dedicated SONET Ring Service node in a Telephone Company location to a customer designated premises or a Collocator's virtual collocation - this serving arrangement is referred to as (SMOA) SONET Mapped Optical Arrangement or to a Telephone Company location where add/drop multiplexing and add/drop functions are performed, and this serving arrangement is referred to as (SMUX) SMOA with a MUX;

(iv) two Dedicated SONET Facility nodes in the same or different Telephone Company location—this serving arrangement is referred to as (DIN) Dedicated Interconnection Network.

Optical Transmission paths for OCN Point-to-Point Service are differentiated by bit rate and the quality of transmission is as delineated by the Optical Interface definitions in the Technical Reference Publications cited in Section 7.2.

OC-3 Service, OC-12 Service, and OC-48 Service may be connected by (1) using the appropriate OC-3, OC-12 or OC-48 add/drop multiplexer (mux) along with the add/drop function to a DS1 and/or DS3 at suitably equipped wire centers, or (2), by using the full bandwidth premises to premises.

7. Special Access Service (Cont'd)

7.2 Service Descriptions (Cont'd)

7.2.10 Optical Carrier Network (OCN) Point-to-Point Service (Cont'd)

(A) Basic Channel Description (Cont'd)

(1) General (Cont'd)

Where appropriate facilities are not immediately available, negotiated intervals may apply. The customer, via the ordering process, must identify what STS signal configuration is to be contained in each OC-3/OC-3c, OC-12/OC-12c, and OC-48/OC-48c service connection and each STS-1. STS-3, and/or STS-12 payload content. This information is needed for routing and connection purposes in the network. OCN does not extend the SONET data communication channel overhead across the network interface to the customer's equipment.

Ethernet over SONET (EoS)

EoS allows the efficient transport of Ethernet frames using SONET. Ethernet Optical Add/Drop capability will be available in bandwidths up to 1 Gbps on an OC-N Point-to-Point. As SONET bandwidths will be present, the customer will be unable to transmit data beyond these present SONET bandwidths. Only Single-Mode Fiber is available in the Central Office. The EoS line rates are based on the theoretical SONET payload line rates as per GR-253-CORE, Issue 4. These values are not representative of the true Ethernet transport capacity of the EoS circuit.

OCN Point-to-Point Service based on customer requirements can be configured in any of the following ways:

(c) OC-3

(i) three STS-1 (Synchronous Transport Signals) channels which each contain:

(A) one DS3 that is STS-1 mapped; or

(B) up to 28 DS1s that are VT-mapped; or

(C) an STS-1 channel without constraint to payload mapping when the STS-1 channel does not terminate via an add/drop function to DS1 or DS3 services within the Ameritech network; or

(D) 1 Gbps Ethernet STS-1 1-2v;

(ii) a single concatenated STS-3C channel.

Certain material previously on this page now appears on 2nd Revised Page 273.1.1

7. Special Access Service (Cont'd)

7.2 Service Descriptions (Cont'd)

7.2.10 Optical Carrier Network (OCN) Point-to-Point Service (Cont'd)

(A) Basic Channel Description (Cont'd)

(1) General (Cont'd)

(d) OC-12 (Cont'd)

(i) twelve STS-1 channels which each contain:

(A) one DS3 that is STS-1 mapped; or

(B) up to 28 DS1s that are VT-mapped; or

(C) an STS-1 channel without constraint to payload mapping when the STS-1 channel does not terminate via an add/drop function to DS1 or DS3 services within the Ameritech network;

(D) 1 Gbps Ethernet STS-1 1-9v; or

(E) 1 Gbps Ethernet STS-3c 1-3v;

(ii) Four concatenated STS-3C channels

(iii) From one to three STS-3Cs channels mixed with from three to nine STS-1 channels subject to utilization of the total OC-12 capacity.

(iv) A single concatenated STS-12C channel

(e) OC-48

(i) forty-eight STS-1 channels which each contain:

(A) one DS3 that is STS-1 mapped; or

(B) up to 28 asynchronous VT-mapped; or

(C) an STS-1 channel without constraint to payload mapping when the STS-1 channel does not terminate via an add/drop function to DS1 or DS3 services within the Ameritech network; or

(D) 1 Gbps Ethernet STS-1 1-21v; or

(E) 1 Gbps Ethernet STS-3c 1-7v;

(ii) sixteen concatenated STS-3C channels.

(iii) from one to fifteen concatenated STS-3C channels, mixed with from three to forty-five STS-1 channels subject to utilization of the total OC-48 capacity.

(iv) four concatenated STS-12Cs channels.

Certain material on this page previously appeared on 1st Revised Page 273.1.
Certain material previously on this page now appears on 2nd Revised Page 273.1.1.1.

7. Special Access Service (Cont'd)

7.2 Service Descriptions (Cont'd)

7.2.10 Optical Carrier Network (OCN) Point-to-Point Service (Cont'd)

(A) Basic Channel Description (Cont'd)

(1) General (Cont'd)

(e) OC-48 (Cont'd)

(v) from one to three concatenated STS-12C channels, mixed with from twelve to thirty-six STS-1 channels subject to utilization of the total OC-48 capacity.

(vi) from one to three concatenated STS-12C channels, mixed with from four to twelve concatenated STS-3C channels, also mixed with from three to thirty-three STS-1 channels subject to utilization of the total OC-48 capacity.

(vii) from one to three concatenated STS-12C channels, mixed with from one to eleven concatenated STS-3C channels also mixed with from three to thirty-three STS-1 channels, subject to utilization of the total OC-48 capacity.

(f) OC-192

(i) One hundred ninety-tow interleaved STS-1 channels

(A) One DS3 that is STS-1 mapped; or

(B) Up to 28 asynchronous DS1s that are VT-mapped; or

(C) An STS-1 channel without constraint to payload mapping when the STS-1 channel does not terminate via an Add/Drop Function to DS1 or DS3 services within the Ameritech network; or

(D) 1 Gbps Ethernet STS-1 1-21v; or

(E) 1 Gbps Ethernet STS-3c 1-7v;.

(ii) Sixty-four interleaved concatenated STS-3 channels.

(iii) From one to sixty-three interleaved concatenated STS-3C channels, mixed with from three to hone hundred eighty-none STS-1 channels, subject to utilization of the total STS-192 capacity.

(iv) Sixteen interleaved concatenated STS-12C channels.

(v) From one to fifteen interleaved concatenated STS-12C channels mixed with from twelve to one hundred eighty STS-1 channels, subject to utilization of the total STS-192 capacity.

Certain material on this page previously appeared on 1st Revised Page 273.1.1.
Certain material previously on this page now appears on 1st Revised Page 273.1.1.3.

7. Special Access Service (Cont'd)

7.2 Service Descriptions (Cont'd)

7.2.10 Optical Carrier Network (OCN) Point-to-Point Service (Cont'd)

(A) Basic Channel Description (Cont'd)

(1) General (Cont'd)

(f) OC-192 (Cont'd)

(vi) From one to fifteen interleaved concatenated STS-12C channels mixed with from four to sixty concatenated STS-3c channels subject to utilization of the total STS-192 capacity

(vii) From one to fifteen interleaved concatenated STS-12C channels, mixed from one to fifty-nine concatenated STS-3C channels also mixed with from three to one hundred seventy-seven STS-1 channels, subject to utilization of the total STS-192 capacity.

(viii) Four interleaved concatenated STS-48C channels.

(ix) From one to three interleaved concatenated STS-48C channels, mixed with from forty-eight to one hundred forty-four STS-1 channels, subject to utilization of the total STS-192 capacity.

(x) From one to three interleaved concatenated STS-48C channels, mixed with from sixteen to forty-eight STS-3C channels, subject to utilization of the total STS-192 capacity.

(xi) From one to three interleaved concatenated STS-48C channels, mixed with from four to twelve STS-12C channels, subject to utilization of the total STS-192 capacity.

(xii) From one to three interleaved concatenated STS-48C channels, mixed with from one to forty-seven concatenated STS-3C channels also mixed with from three to one hundred forty-one STS-1 channels, subject to utilization of the total STS-192 capacity.

(xiii) From one to three interleaved concatenated STS-48C channels, mixed with from one to eleven concatenated STS-12C channels also mixed with from twelve to one hundred thirty-two STS-1 channels, subject to utilization of the total STS-192 capacity.

(xiv) From one to three interleaved concatenated STS-48C channels, mixed with from one to eleven concatenated STS-12C channels also mixed with from four to forty-four concatenated STS-3C channels, subject to utilization of the total STS-192 capacity.

(xv) From one to three interleaved concatenated STS-48C channels, mixed from one to eleven concatenated STS-12C channels also mixed with from three to one hundred twenty-nine STS-1 channels, subject to utilization of the total STS-192 capacity.

Certain material on this page previously appeared on 1st Revised Page 273.1.1.1

7. Special Access Service

7.2 Service Descriptions (Cont'd)

7.2.10 Optical Carrier Network (OCN) Point-to-Point Service (Cont'd)

(B) Channel Configuration

OCN Point-to-Point Channels consist of Local Distribution Channels (LDCs), Interoffice Transport, and Optional Features and Functions.

(1) OCN Point-to-Point Local Distribution Channels
The Local Distribution Channel rate category (same as Channel Termination) provides for the communications path between a customer-designated premises and the serving wire center of that premises, as described in Section 7.1.2 (A). LDCs are only offered without SBC provided and maintained terminal OLT equipment at the customer's designated premises and will hand off basic 2-fiber or 4-fiber optical cables, depending upon the optional feature (as ordered). One LDC is applied per customer-designated premises at which the channel is terminated, even if collocation exists.

OCN Point-to-Point Local Distribution Channels provide optical interconnection between the Telephone Company Serving Wire Center (SWC) and the customer premises.

SBC offers the following types of LDCs:

- OC-3/OC-3c
- OC-12/OC-12c
- OC-48/OC-48c
- OC-192/OC-192c

When OCN Point-to-Point Service is provided, the customer is responsible for providing the Optical Line Termination (OLT) at the customer's premises. The OLT supplied at the customer premises must be compatible with the OLT used by the Telephone Company in the Serving Wire Center. The Telephone Company will work cooperatively with the customer to select compatible OLTs, which conform to the requirements set forth in Technical Reference Publication AM-TR-TMO-000101.

All LDCs comprising a channel must have the same terminating bit rate unless multiplexing is performed at a Telephone Company Hub location.

7. Special Access Service (Cont'd)

7.2 Service Descriptions (Cont'd)

7.2.10 Optical Carrier Network (OCN) Point-to-Point Service (Cont'd)

(B) Channel Configuration (Cont'd)

(2) Interoffice Transport

Interoffice Transport facilities, comprised of Channel Mileage Termination (CMT), described in Section 7.1.2(B) preceding, and Channel Mileage (CM), described in Section 7.1.2 (C) preceding, provide the transmission paths between Serving Wire Centers associated with two customer-designated premises or between a Serving Wire Center associated with a customer premises and a Telephone Company Hub location. Four Interoffice Transport types are available: OC-3/OC-3c, which supports a bit rate of 155.52 Mbps; OC-12/OC-12c, which supports a bit rate of 622.08 Mbps; OC-48/OC-48c, which supports a bit rate of 2488.32 Mbps; and OC-192/OC-192c, which supports a bit rate of 9953.28 Mbps.[1]

OC-3/OC-3c LDCs are interconnected to OC-3/OC-3c transport.
OC-12/OC-12c LDCs are interconnected to OC-12/OC-12c transport.
OC-48/OC-48c LDCs are interconnected to OC-48/OC-48c transport.
OC-192/OC-192c LDCs are interconnected to OC-192/OC-192c transport.

In addition, Interoffice Transport can be connected between wire centers with Add/Drop multiplexing at a lower OC-N speed than the LDC, if the transport is between a lower speed Add/Drop Function and:

- another lower speed Add/Drop Function
- another lower speed Local Distribution Channel
- a lower speed Dedicated Ring Port

All of the above terminations must be the same speed as the transport.

[1] Effective on August 21, 2018, AT&T will no longer offer term plans longer than 36 months, including any renewals, extensions or conversions of existing term commitments. (T) (T)

7. Special Access Service (Cont'd)

7.2 Service Descriptions (Cont'd)

7.2.10 Optical Carrier Network (OCN) Point-to-Point Service (Cont'd)

(B) Channel Configuration (Cont'd)

(3) Optional Features and Functions

The following optional features and functions are available:

- Add/Drop Multiplexing
- Add/Drop Function
- OC-3, OC-12, OC-48 and OC-192 Cross-Connects
- 1+1 Protection (OC-3/OC-3c, OC-12/OC-12c, OC-48/OC-48c, and OC-192)
- 1+1 Protection with Cable Survivability (OC-3/OC-3c, OC-12/OC-12c, OC-48/OC-48c, and OC-192)
- 1+1 Protection with Route Survivability (OC-3/OC-3c, OC-12/OC-12c, OC-48/OC-48c, and OC-192)
- 1+1 Protection with Diversity
- 1+1 Protection with Site Survivability
  - 1+1 Protection with Central Office Survivability*
  - 1+1 Protection with Customer Premise Survivability*
- Regenerators (OC-48 and OC-192)

(a) OC-3, OC-12, OC-48 and OC-192 Add/Drop Multiplexing

Add/Drop multiplexing is an arrangement in a Telephone company central office that allows non-concatenated OC-3, OC-12, OC-48, or OC-192 channels operating at a terminating speed of 155.52 Mbps, 622.08 Mbps, 2488.32 Mbps, or 9953.28 Mbps, respectively, to add/drop a lower speed channel by using this feature along with the add/drop function as stated in Section 7.2.10 (B) (3) (b). The mix of multiplexing signals cannot exceed the maximum bandwidth of the higher speed OCN circuit terminating on the Central Office multiplexer.

* 1+1 Protection with Central Office Survivability for OC-3 and OC-12 and/or Customer Premise Survivability for OC-12 and OC-48, subscribed to, on or after April 11, 2002, will no longer be available.

7. Special Access Service (Cont'd)

7.2 Service Descriptions (Cont'd)

7.2.10 Optical Carrier Network (OCN) Point-to-Point Service (Cont'd)

(B) Channel Configuration (Cont'd)

(3) Optional Features and Functions (Cont'd)

(a) OCN Point-to-Point Add/Drop Multiplexing (Cont'd)

For example, OC-3 add/drop multiplexing at a Telephone Company wire center will provide the capability to support the full add/drop function capacity of OC-3 Service bandwidth with up to 3 DS3 add/drop functions or equivalently up to 3 groups of 28 DS1 add/drop functions.

At the time of ordering any of the following basic rate categories, the customer must provide configuration information for the entire multiplexing option at the time the order for service is placed. In addition, concatenated services OC-3, OC-12, or OC-48 cannot be ordered under the central office feature section, as the Telephone Company cannot convert individual STS-1 signals to concatenated (non-channelized) channels.

OC-12 add/drop multiplexing at a Telephone Company wire center will provide the capability to support the full add/drop function capacity of OC-12 service bandwidth with up to 4 OC-3 add/drop functions or up to twelve DS3 add/drop functions or equivalent combinations of OC-3 and DS3 add/drop functions.

If asynchronous DS1 ports are required on an OC-12 OCN circuit, then the OC-3 add/drop multiplexing feature and associated DS1 add/drop function must be ordered in addition to the OC-12 add/drop multiplexing feature.

OC-48 add/drop multiplexing at a Telephone Company wire center will provide the capability to support one quarter of the add/drop function capacity of OC-48 service bandwidth. Up to four OC-48 add/drop multiplexing options may be provided with each supporting one OC-12 add/drop function, or up to 4 OC-3 add/drop functions or up to twelve DS3 add/drop functions or equivalent combination of OC-3 and DS3 add/drop functions. If DS1s are required for the OC-12, then the preceding guidelines can be followed.

OC-192 add/drop multiplexing at a Telephone Company wire center will provide the capability to support full add/drop function capacity of OC-192 service bandwidth. Up to four OC-48 add/drop functions, or up to 16 OC-12 add/drop functions, or up to 64 OC-3 add/drop functions or equivalent combinations of OC-48, OC-12, and OC-3 add/drop functions are supported.

7. Special Access Service (Cont'd)

7.2 Service Descriptions (Cont'd)

7.2.10 Optical Carrier Network (OCN) Point-to-Point Service (Cont'd)

(B) Channel Configuration (Cont'd)

(3) Optional Features and Functions (Cont'd)

(b) Add/Drop Function

The OCN Point-to-Point Service can add or drop lower level signals as shown in the matrix following. The add/drop function is offered at a circuit level. For example, if a customer wants to drop one DS3 signal from an OC-12 service, they would pay one add/drop charge for the DS3 and the initial OC-12 add/drop multiplexing charge.

An OCN Point-to-Point Service is only able to add/or drop the services that have been identified by payload content (mapping) within the bandwidth. DS1 mapped STS-1 signals are only able to connect to DS1s, and DS3 mapped STS-1 signals are only able to connect to DS3s. If a change is required it may be accomplished by the customer's CPE or through the current asynchronous environment for multiplexing of DS3 and DS1 services stated in Section 7.2.9.

The options in Sections 7.2.10 (B) (3) (a) and (b) preceding cannot be used with OC-3, OC-12, or OC-48 Service configured by the customer to contain a single non-channelized (concatenated) STS-3C or STS-12C signal, respectively.

Ethernet over SONET (EoS) is supported by an Add/Drop function. The quantities allowed will depend upon the VT or STS bandwidth assigned over the port.

	Add Drop Function					
	DS1	DS3	OC-3	OC-12	OC-48	1000 Base LX
C-192	No	No	Yes	Yes	Yes	Yes
OC-48	No	Yes	Yes	Yes	N/A	Yes
OC-12	No	Yes	Yes	N/A	N/A	Yes
OC-3	Yes	Yes	N/A	N/A	N/A	Yes

7. Special Access Service (Cont'd)

7.2 Service Descriptions (Cont'd)

7.2.10 Optical Carrier Network (OCN) Point-to-Point Service (Cont'd)

(B) Channel Configuration (Cont'd)

(3) Optional Features and Functions (Cont'd)

(c) OC-3, OC-12, OC-48 and OC-192 Cross-Connect

An arrangement to cross-connect OC-3 Service, OC-12 service, OC-48 Service or OC-192 Service to another service or to an add/drop function of the same speed at a wire center for the same or for a different customer on a per-circuit basis. The customer must purchase service to the wire center from their designated premises. One charge applies per cross-connected service.

(d) 1+1 Protection

This option provides two identical fiber pairs that are placed in the same cable and follow the same route. If the working pair fails, traffic shifts to the protected fiber pair. This option does not protect against a fiber cable cut.

The protected OC-3/OC-3c Service, OC-12/OC-12c Service, OC-48/OC-48c Service, and OC-192/OC-192c Service are offered with four fibers in the same cable, and the protection card is activated when this option is ordered. This will allow customers to order protection if their CPE can accommodate it.

(e) 1+1 Protection with Cable Survivability/1/

With this option, the working fiber pairs and the protect fiber pairs are located in two separate cables within the same conduit. If the working fiber pair cable experiences damages or a fiber cut, traffic will switch to the protected fiber pair in a separate cable. These cables are located in the same conduit; if the conduit is cut, there is no protection.

This option will provide 1+1 Protection and additional loop survivability with the working fiber pair and protect fiber pair placed in separate cables within the same conduit.

/1/ Not available for OCN service originating and terminating within a Telephone Company location.

7. Special Access Service (Cont'd)

7.2 Service Descriptions (Cont'd)

7.2.10 Optical Carrier Network (OCN) Point-to-Point Service (Cont'd)

(B) Channel Configuration (Cont'd)

(3) Optional Features and Functions (Cont'd)

(f) 1+1 Protection with Route Survivability/1/

This option will provide 1+ 1 protection and offer additional protection from fiber cable cuts by routing the working fiber pair via the primary route and the protect fiber pair via a physically diverse alternate route. The protected fiber will be charged on a distance sensitive basis, in addition to the protection optical charge and will be based on quarter route miles, from the customer premises to the serving wire center.

This is the only option that will also assure 100 percent availability of the service. Any service interruption will result in a credit equal to one month's bill for the circuit involved. If the interruption occurs on a Local Distribution Channel without this option, normal terms and conditions for out of service credits as stated in 2.4.4 preceding will apply. An interruption period will start when an inoperative service is reported to the Telephone Company and end when the service is operative. In any month, as a result of an interruption, the total credit per rate element of the interrupted service may not exceed 100 percent of the monthly charge for that particular rate element. All other terms and conditions for Credit Allowances as stated in 2.4.4 preceding, will apply.

Prior to confirming an order for service, the Telephone Company will provide a proposed route diagram to the customer. The diagram will include the number of quarter route miles and the method used to support the number needed to provide the alternate route. In order to avoid compromising Route Survivability information, the Telephone Company will provide this information only to the ordering customer.

Installation of the 1+1 protection with Route Survivability option will not begin until the customer has accepted the Telephone Company's proposed routing.

/1/ Not available for OCN service originating and terminating within a Telephone Company location.

7. Special Access Service (Cont'd)

7.2 Service Descriptions (Cont'd)

7.2.10 Optical Carrier Network (OCN) Point-to-Point Service (Cont'd)

(B) Channel Configuration (Cont'd)

(3) Optional Features and Functions (Cont'd)

(g) Diversity

This option will provide end-to-end diversity from A-Z for the second like service. It requires a charge for mileage on a "per Quarter Route Mile" basis, for each customer premises or Local Distribution Channel (LDC), only when both circuits terminate at the same customer premises. The standard OCN PTP service is provided without protection, but it is still an option with Diversity. 1+1 Protection is defined above and rates will apply as stated in Diversity Sections, 7.5.10 (A) (4) (i) - (OC-3), 7.5.10 (B) (4) (j) - (OC-12), 7.5.10 (C) (4) (j) - (OC-48), and 7.5.10 (D) (4) (h) - (OC-192). For the inter-office portion, the Diversity rate will cover any additional air-line mileage between serving wire centers.

This is the only option that will assure 100% availability from end-to-end of the service. Any service interruption of both services at the same time will result in a credit of one month’s bill for the second circuit. If the interruption occurs on a section of the service where commonality has been identified to the customer, normal terms and conditions for out of service credits, as stated in Section 2.4.4, will apply. An interruption period will start when an inoperative service is reported to the Telephone Company, and end when the service is operative. In any month, as a result of an interruption, the total credit per rate element of the interrupted service may not exceed 100 percent of the monthly charge for that particular rate element.

All other terms and conditions for Credit Allowances, as stated in Section 2.4.4, will apply.

Prior to confirming an order for service, the Telephone Company will provide a proposed route diagram to the customer. The diagram will include the number of quarter route miles and method used to support the number needed to provide the alternate route. In order to avoid compromising Route Survivability information, the Telephone Company will provide this information only to the ordering customer.

Installation of the Diversity option will not begin until the customer has accepted the proposed routing by the Telephone Company.

7. Special Access Service (Cont'd)

7.2 Service Descriptions (Cont'd)

7.2.10 Optical Carrier Network (OCN) Point-to-Point Service (Cont'd)

(B) Channel Configuration (Cont'd)

(3) Optional Features and Functions (Cont'd)

(h) 1+1 Protection with Site Survivability

(1) 1+1 Protection with Central Office Survivability for OC-3 and OC-12*

This option will provide 1+1 protection and offer additional protection from Serving Wire Center (SWC) failure for services not terminating at the SWC by routing the working fiber pair via the primary route to the customer's SWC and the protect fiber pair to an alternate wire center chosen by the Telephone Company. The protect fiber will be charged on a distance sensitive basis, based on quarter route miles, from the customer premises to the alternate wire center. Channel Mileage and Channel Mileage Terminations for the appropriate OC-3 or OC-12 service ordered will be charged between the SWC and the alternate wire center using the V&H coordinates method as stated in National Exchange Carrier Association Tariff, Inc. F.C.C. No. 4.

This option will also assure 100% availability of the service. Any service interruption will result in a credit equal to one month's bill for the circuit involved. If the interruption occurs on a Local Distribution Channel without this option, normal terms and conditions for out of service credits as stated in Section 2.4.4 will apply. An interruption period will start when an inoperative service is reported to the Telephone Company and end when the service is operative. In any month, as a result of an interruption, the total credit per rate element of the interrupted service may not exceed 100% of the monthly charge for that particular rate element. All other terms and conditions for Credit Allowances as stated in Section 2.4.4, will apply.

* 1+1 Protection with Central Office Survivability for OC-3 and OC-12 subscribed to on or after April 11, 2002, will no longer be available.

ACCESS SERVICE

7. Special Access Service (Cont'd)

7.2 Service Descriptions (Cont'd)

7.2.10 Optical Carrier Network (OCN) Point-to-Point Service (Cont'd)

(B) Channel Configuration (Cont'd)

(3) Optional Features and Functions (Cont'd)

(h) 1+1 Protection with Site Survivability (Cont'd)

(1) 1+1 Protection with Central Office Survivability for OC-3 and OC-12* (Cont'd)

Prior to confirming an order for service, the Telephone Company will provide a proposed diagram to the customer. The diagram will include the number of quarter route miles and method used to support the number needed to provide the route to the alternate wire center. In order to avoid compromising Central Office Survivability information, the Telephone Company will provide this information only to the ordering customer.

Installation of the 1+1 protection with Central Office Survivability option will not begin until the customer has accepted the proposed routing by the Telephone Company.

If the customer wants to use this optional feature as a ring extension with OC-12 or OC-48 Dedicated Ring Service/1/ /2/, then both the customer's Serving Wire Center and alternate wire center must have Nodes located on the ring. The Telephone Company will work cooperatively with the customer to determine the appropriate alternate wire center to be used for the Dedicated Ring situation. Channel Mileage and Channel Mileage Termination will not apply to this option when used with a ring extension. (C)

(2) 1+1 Protection with Customer Premises Survivability (CPS) for OC-12 and OC-48*

1+1 Protection with Customer Premises Survivability (CPS) offers traditional 1+1 protection with additional protection from customer premises failure. The CPS option provides diverse routing for the OC-N service protection path between the primary customer premises serving wire center (PSWC) and an alternate customer premises. This option will allow originating and terminating OC-N traffic to be routed to the PSWC via an alternate customer's premises Serving Wire Center (ASWC) in case of a failure.

* 1+1 Protection with Central Office Survivability for OC-3 and OC-12 and/or Customer Premises Survivability for OC-12 and OC-48 subscribed to on or after April 11, 2002 will no longer be available.

/1/ Effective on August 21, 2018, AT&T will no longer offer term plans longer than 36 months, including any renewals, extensions or conversions of existing term commitments.

/2/ Effective on or after December 1, 2021, neither new nor existing customers will be permitted to purchase new OC3, OC12, OC48 and OC192 Dedicated Ring (Service). In addition, (A) Service Payment Plans greater than 12-months in length will no longer be available; and (B) requests to move, add, change, upgrade, or downgrade existing Service arrangements will not be accepted, with the following exceptions: (1) existing customers will be permitted to modify their existing Service and will be able to add new circuits to their existing Service, but will not be permitted to add new nodes in any locations; and (2) any such new circuits will be subject to the customer's existing term payment plan or term agreement for the Service to which they are added. Following the expiration of a customer's existing term agreement, Service will be provided on a month-to-month basis at the applicable Monthly rates until the Service is discontinued. (N)
Effective November 30, 2023, unless specified to the contrary in their existing Service agreements, existing customers may not renew Term Payment Plans or term agreements for Service. In addition, no move, add, or change orders of any type will be accepted. (N)

7. Special Access Service (Cont'd)

7.2 Service Descriptions (Cont'd)

7.2.10 Optical Carrier Network (OCN) Point-to-Point Service (Cont'd)

(B) Channel Configuration (Cont'd)

(3) Optional Features and Functions (Cont'd)

(h) 1+1 Protection with Site Survivability (Cont'd)

(2) 1+1 Protection with Customer Premises Survivability (CPS) for OC-12 and OC-48* (Cont'd)

Using this option, the customer and the Telephone Company jointly select a single wire center from which add/drop multiplexing is allowed. This wire center may be the PSWC, the ASWC or another Telephone Company wire center equipped with add/drop multiplexing.

OC-N Channel Mileage (CM) and Channel Mileage Termination (CMT) rate elements are not available with this option.

CPS mileage applies between the PSWC, ASWC and the add/drop multiplexing wire center (when applicable) and is assessed on a per air mile basis. Calculation of air mileage is described in 7.4.7, preceding.

The CPS Termination charge applies at the PSWC and the ASWC. If an add/drop multiplexer location different from either the PSWC or ASWC is utilized, two additional CPS Termination Charges apply at that location.

CPS OC-N Regenerator provides for signal regeneration on a per OC-N regenerator basis (if required) when the actual protection path exceeds design limits (typically 25 to 30 air miles).

CPS Extension represents the facility utilized between the alternate customer premises and the alternate serving wire center. The CPS Extension, while architecturally similar to a Local Distribution Channel, differs in that the facilities are dedicated to the protection path for this customer application. The cost of this rate element is independent of the speed of the service unlike the Local Distribution Channel (LDC) which changes along with the service channel required for the OC-N service.

* 1+1 Protection with Customer premises Survivability for OC-12 and OC-48 subscribed to on or after April 11, 2002, will no longer be available.

7. Special Access Service (Cont'd)

7.2 Service Descriptions (Cont'd)

7.2.10 Optical Carrier Network (OCN) Point-to-Point Service (Cont'd)

(B) Channel Configuration (Cont'd)

(3) Optional Features and Functions (Cont'd)

(h) 1+1 Protection with Site Survivability (Cont'd)

(2) 1+1 Protection with Customer Premises Survivability (CPS) for OC-12 and OC-48* (Cont'd)

Both customer and Telephone Company equipment must be configured for path switching/ring operation per Ameritech Technical Reference AM-TR-NIS-000111 for this option.

Rate elements for Customer Premises Survivability (CPS) include;

- CPS Mileage (measured in air miles - one mile minimum)
- CPS Termination (per wire center - as required)
- CPS Regenerator OC-N (as required)
- CPS Extension (from the ASWC to the alternate customer premises)

If existing facilities do not exist, Special Construction may apply.

(i) Point-to-Point OC-48 and OC-192 Regenerator

Regenerators provide essential detection and retransmission of SONET Optical 2488.32 Mbps or 9953.258 Mbps signals between customer premises. Regenerators will only be provided as required by the Telephone Company when actual fiber facility distances between customer designated premises and/or central office locations exceed design limits (typically 25 to 30 miles). Regenerators will be located exclusively in Telephone Company central offices.

* 1+1 Protection with Customer Premises Survivability for OC-12 and OC-48 subscribed to, on or after April 11, 2002 will no longer be available.

7. Special Access Service (Cont'd)

7.2 Service Descriptions (Cont'd)

7.2.10 Optical Carrier Network (OCN) Point-to-Point Service (Cont'd)

(B) Channel Configuration (Cont'd)

(3) Optional Features and Functions (Cont'd)

The following diagrams provide an example of (d), (e) and (f) above:

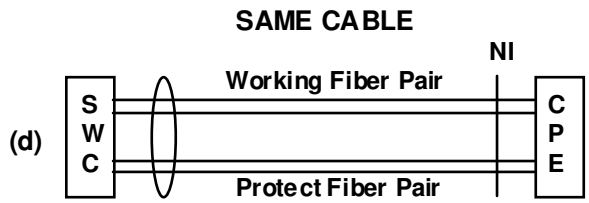

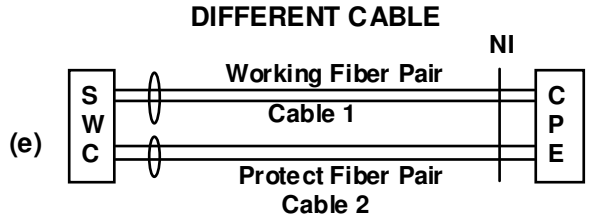

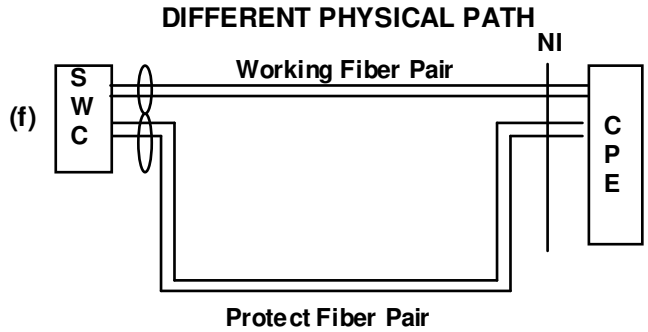

7. Special Access Service (Cont'd)

7.2 Service Descriptions (Cont'd)

7.2.10 Optical Carrier Network (OCN) Point-to-Point Service (Cont'd)

(B) Channel Configuration (Cont'd)

(3) Optional Features and Functions (Cont'd)

The following diagram provides an example of (h)(1) above:

1 + 1 Protection with Central Office Survivability *

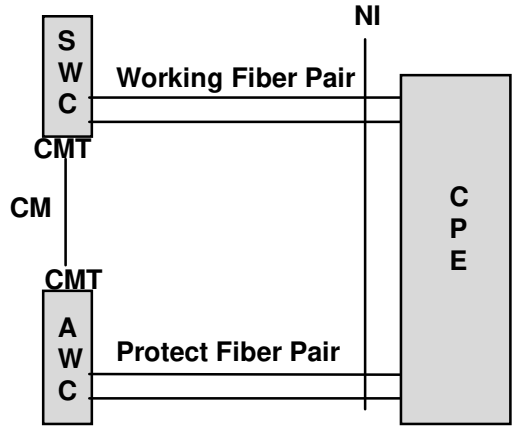

*CM	=	Channel Mileage
*CMT	=	Channel Mileage Terminations
AWT	=	Alternate Wire Center

* 1+1 Protection with Customer Premises Survivability for OC-3 and OC-12 subscribed to, on or after April 11, 2002 will no longer be available.

7. Special Access Service (Cont'd)

7.2 Service Descriptions (Cont'd)

7.2.10 Optical Carrier Network (OCN) Point-to-Point Service (Cont'd)

(B) Channel Configuration (Cont'd)

(3) Optional Features and Functions (Cont'd)

The following diagram provides an example of (h)(2) above:

1 + 1 PROTECTION WITH CUSTOMER PREMISES SURVIVABILITY*

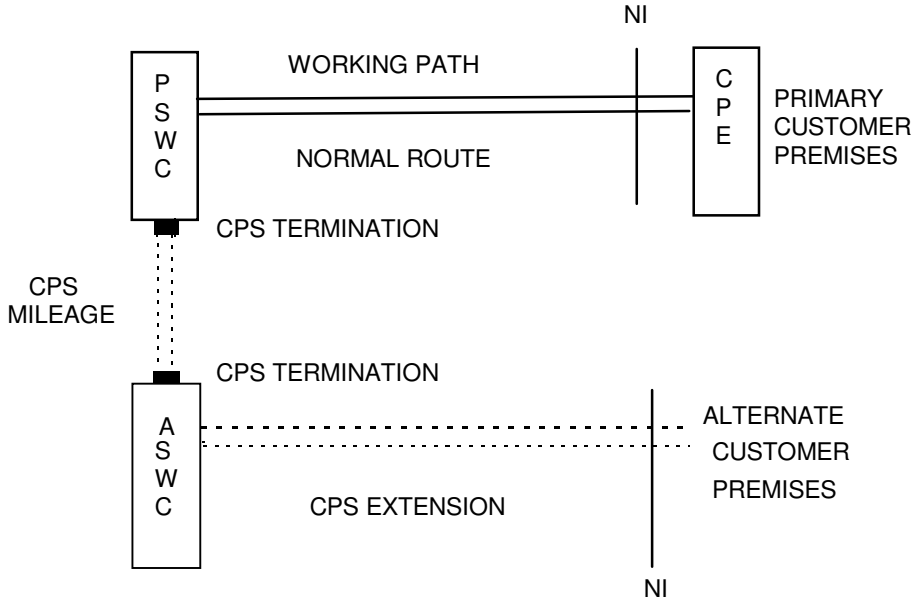

CPS	**=**	**Customer Premises Survivability**
ASWC	**=**	**Alternate Serving Wire Center**
PSWC	**=**	**Primary Serving Wire Center**
- - - - -	**=**	**Protection Path**

* 1+1 Protection with Customer Premises Survivability for OC-12 and OC-48 subscribed to, on or after April 11, 2002 will no longer be available.

ACCESS SERVICE

7. Special Access Service (Cont'd)

7.2 Service Descriptions (Cont'd)

7.2.10 Optical Carrier Network (OCN) Point-to-Point Service (Cont'd)

(B) Channel Configuration (Cont'd)

(3) Optional Features and Functions (Cont'd)

The following diagram provides an example of (g) above:

OC-N PTP Survivability with Diversity (Two Circuits Diverse E-E, same locations)

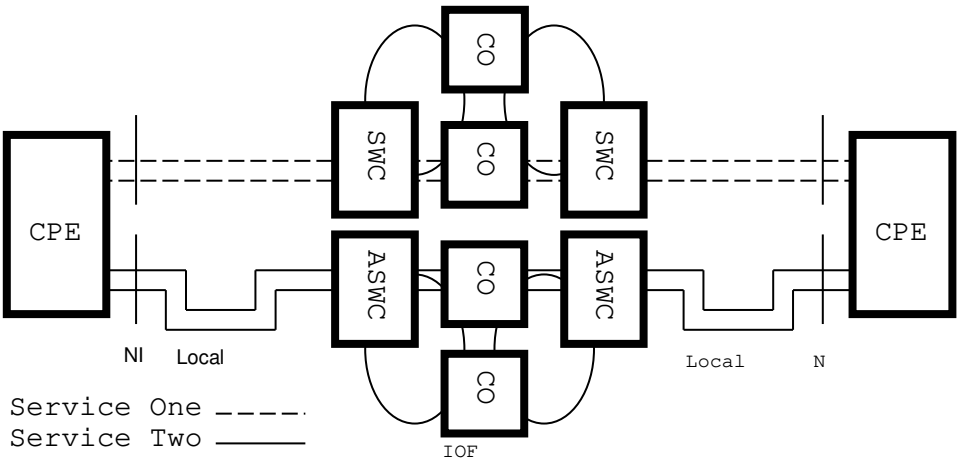

7. Special Access Service (Cont'd)

7.2 Service Descriptions (Cont'd)

7.2.10 Optical Carrier Network (OCN) Point-to-Point Service (Cont'd)

(B) Channel Configuration (Cont'd)

(3) Optional Features and Functions (Cont'd)

(i) Shared Network Arrangement(1) (Cont'd)

(i) A Shared Network Arrangement is a service offering that enables a customer ("Service User") to connect subtending services to the multiplexed OCN Point-to-Point service of another customer (the "Host Subscriber"), with the Telephone Company maintaining separate billing for each. Each customer will be billed for those rate elements associated with their own portion of the service configuration. Under no circumstances will the rates or charges for individual rate elements be split. This offering is limited to service configurations where a Service User obtains either subtending DS3 or DS1 from a Host's multiplexed OC-3 service or an OC-3 service from a Host's multiplexed OC-12 service or an OC-12 service from a Hosts' multiplexed OC-48 service or an OC-48 service from a Host's multiplexed OC-192 service.

(ii) Under the Shared Network Arrangement, the Telephone Company may share record information with the Host subscriber pertaining to the services of other users of the shared network. Such disclosure will be under the sole discretion of the Telephone Company and is necessary to perform billing reconciliation and/or other functions required in connection with maintaining account records.

(iii) Section 7.4.12 contains rate regulations specific to Shared Network Arrangements.

(4) Technical Specifications Packages

The technical specifications for OC-3/OC-3c, OC-12/OC-12c and OC-48/OC-48c, and OC-192 are described in Technical References, AM-TR-NIS-000111 and AM-TR-TMO-000101.

(1) Effective 06/01/06, this regulation is limited to existing customers. For new customers purchasing Shared Network Arrangement, terms and conditions set forth in Section 5.2 (A), will apply.

ACCESS SERVICE

7. Special Access Service

7.2 Service Descriptions (Cont'd)

7.2.10 Optical Carrier Network (OCN) Point-to-Point Service (Cont'd)

(B) Channel Configuration (Cont'd)

(5) Network Channel Interfaces

The network channel interfaces define the bit rates that are available for OCN Point-to-Point services operating at speeds of 155.52 Mbps, 622.08 Mbps, and 2488.32 Mbps, and 9953.28 Mbps. Network Channel interfaces and codes are described in 7.3 following.

(C) Monthly Extension Rates

At the expiration of the TPP term, and if the customer wishes to continue OC-3/OC-3c, OC-12/OC-12c, OC-48/OC-48c, or OC-192/OC-192c services, the customer may select a new TPP/2/ at the prevailing TPP rate.

If a customer does not wish to renew the TPP at the expiration of the term, the Monthly Extension Rates will apply until the customer cancels or renews the service with a new TPP term. Monthly Extension Rates are not available as an individual TPP and are to be used as a default applied at the end of a regular 1-year (12month), 3-year (36-month) and 5-year (60-month) TPP/2/.

(D) Nonrecurring Charges*

Nonrecurring charges are one-time charges that apply for specific work activity (such as installation of new services and rearrangements of installed services), as described in Section 7.4.2.

(E) Minimum Periods

The Minimum Period for the OCN Point-to-Point Service is one year for all customers including one, three and five year TPP customers/1//2/. The Minimum Period for OC-192 OCN Point-to-Point Service is three years. In the event OCN Point-to-Point Services is terminated prior to completion of the minimum period, termination liabilities, as described in 7.2.10(G) will apply.

*For Services ordered under MVP, refer to Section 19.3 (E) (5).

/1/ As of December 9, 2004, the One Year Minimum Period for OC-192 OCN Point-to-Point Service will no longer be available to new customers. There will be no change to existing customers.

/2/ Effective on August 21, 2018, AT&T will no longer offer term plans longer than 36 months, including any renewals, extensions or conversions of existing term commitments. (T) (T)

7. Special Access Service

7.2 Service Descriptions (Cont'd)

7.2.10 Optical Carrier Network (OCN) Point-to-Point Service (Cont'd)

(F) Term Pricing Plans (TPP)

(1) General Description

For Pricing Plans beginning prior to November 25, 2019:

Term Pricing Plans (TPP) are available on Local Distribution Channels, Interoffice Transport, and Add/Drop Multiplexing rate elements. The TPP stabilizes rates for OCN Point-to-Point Service for the specified period of time. The following TPPs are available:

- One Year (12 Month) TPP
- Three Year (36 Month) TPP, or
- Five Year (60 Month) TPP/1/

For Pricing Plans beginning on or after November 25, 2019:
New Pricing Plan customers will be required to pay the lower of (1) the guidebook Term Pricing Plan rate at the time of billing; or (2) 120% of the initial rate in the first year of the contract; 144% in the second year of the contract, and 173% in the third year of the contract.

(2) Modifications

When additional like-speed OCN Point-to-Point Service circuits are purchased, the customer may include the additional circuits in an existing TPP if:

The customer renegotiates its TPP for a period of time equal to or greater than the time remaining on the existing TPP;

The circuits are the same speed; and

The circuits are located between the same customer designated premises.

(3) Renewals

At the end of a TPP period, the customer must select one of the following options within one month prior to the expiration date:

a. Renew the service for a one, three or five-year TPP/1/ as provided in this tariff;
b. Elect to disconnect the service upon expiration of the billing period; or
c. Continue the service on a monthly basis at the current monthly extension rates.

All services under an existing TPP that are not renewed within the period stated above will revert to Option (3) c above and be billed at the current monthly extension rates.

/1/ Effective on August 21, 2018, AT&T will no longer offer term plans longer than 36 months, including any renewals, extensions or conversions of existing term commitments. (T) (T)

ACCESS SERVICE

7. Special Access Service

7.2 Service Descriptions (Cont'd)

7.2.10 Optical Carrier Network (OCN) Point-to-Point Service (Cont'd)

(F) Term Pricing Plans (TPP) (Cont'd)

(4) Conversions

If there is at least one month remaining on an existing 1 or 3 year OCN Point-to-Point TPP, the customer may convert the service to a higher term OCN Point-to-Point TPP without termination liability and, at the time of the access order to convert, retain the service for the period remaining on the higher term OCN Point-to-Point TPP. No retroactive OCN Point-to-Point TPP discounts will apply prior to the order date.

For example, a customer with an existing 3-Year OCN Point-to-Point TPP with 11 months remaining elects to convert to a 5-Year[/1/] OCN Point-to-Point TPP. At the time of the order, the customer will begin paying the 5-year[/1/] TPP rate for the remaining period of 2 years and 11 months (35 months) on the new TPP.

(5) Transitioning from Other Special Access Services to OCN Point-to-Point

The customer may, at any time, move other Telephone Company Special Access Services that have not been grandfathered, to an OCN Point-to-Point service. Charges for the transition will be the nonrecurring charges for the installation of the new OCN Point-to-Point rate elements as listed in Section 7.5.10, created by the transition. No other charges, such as Service Facility Moves will be applicable to such transitions. The relevant Telephone Company tariff sections for the services, if applicable for the Special Access Services being transitioned from, will govern termination charges in question.

In the event that the current Point-to-Point Special Access service is no longer available to the customer and their existing term payment plan has not been completed or expired, the customer may choose to convert their TPP using the OCN Point-to-Point service as described in Section 7.2.10(N). If the customer's TPP expires and the customer does not choose to renew their TPP for any of the Telephone Company Access Services including OCN Point-to-Point, or if the customer fails to notify the Telephone Company of their plans to renew their TPP upon expiration of the current TPP, all TPPs will become subject to Monthly Extension Rates as set forth in Section 7.2.10(C). Upon notification by the customer that renewal of the TPP or the cancellation of service is needed, the Telephone Company will remove the monthly extension rate and normal TPP terms and conditions will apply or not apply in the case of cancellation of service.

[/1/] Effective on August 21, 2018, AT&T will no longer offer term plans longer than 36 months, including any renewals, extensions or conversions of existing term commitments. (T) (T)

ACCESS SERVICE

7. Special Access Service

7.2 Service Descriptions (Cont'd)

7.2.10 Optical Carrier Network (OCN) Point-to-Point Service (Cont'd)

(G) Termination Liability

Customer requesting termination of service prior to the expiration date of the OCN Point-to-Point TPP will be liable for a termination charge. The termination charge for all TPP terms with an Optical Interface, will be calculated as follows:

Billing Period	Termination Percentage
1,3 or 5 years[/1/]	50%

The termination liability is calculated as follows:

(Monthly recurring rate) **X** (Months remaining X (Termination percentage)
in billing)
Example:

An OCN Point-to-Point customer with a $20,000 monthly rate terminates service after 2 years with 1 year (12 months) remaining in a 3-year TPP. The termination liability would be calculated as:

$20,000 x 12 x .50 = $120,000 Termination Liability

A termination charge will not apply under the following conditions and circumstances:

1. Moves as set forth under “Moves” without decreasing number of OC-N PTP circuits
2. Modifications of services as described in the tariff
3. Conversions to other special access service if
   a. service is same or higher
   b. billing period same or greater
   c. billing period revenue for the special access service is greater than or equal to the OC-N PTP billing period revenue.

(H) Moves

Moves involve a change in the physical location of one of the following:

- Service rearrangement;
- Point of Termination at the customer’s premises; or
- Customer’s premises.

Move charges are dependent upon the type of move requested by the customer.

/1/ Effective on August 21, 2018, AT&T will no longer offer term plans longer than 36 months, including (T)
any renewals, extensions or conversions of existing term commitments. (T)

7. Special Access Service (Cont'd)

7.2 Service Descriptions (Cont'd)

7.2.10 Optical Carrier Network (OCN) Point-to-Point Service (Cont'd)

(H) Moves (Cont'd)

(1) Service Rearrangement

Service rearrangements are changes to existing (installed) services which do not result in either a change in the minimum period requirements as set forth in Section 5.2.5 or a change in the physical location of the point of termination at a customer or customer's end user premises, as described in Section 7.4.2.

(2) Moves Within the Same Building

When the move is to a new location within the same building, the Administrative Charge and Customer Connection Charge for the service termination affected will apply. There will be no change in the minimum period requirements, as described in Section 7.4.6.

(3) Moves To a Different Building

Moves to a different building will be treated as a discontinuance and start of ser and all associated nonrecurring charges will apply. New minimum period requirements will be established for the new services. The customer will also remain responsible for satisfying all outstanding minimum period charges for the discontinued service, as described in Section 7.4.6.

(I) Mileage Measurement

The mileage is calculated on the airline distance between the locations involved, i.e., the serving wire centers associated with two customer designated premises, the serving wire center associated with a customer designated premises and an international boundary point, a serving wire center associated with a customer designated premises and a Telephone Company Hub, a serving wire center associated with a customer designated premises and a WATS Serving Office as described in Section 7.4.7.

(J) Modification of Access Service

The customer may request a modification of its Access Order at anytime prior to notification by the Telephone Company that service is available for the customer's use. The Telephone Company will make every effort to accommodate a requested modification when it is able to do so with the normal work force assigned to complete such an order within normal business hours. If the modification cannot be made with the normal work force during normal business hours, the Telephone Company will notify the customer.

7. Special Access Service (Cont'd)

7.2 Service Descriptions (Cont'd)

7.2.10 Optical Carrier Network (OCN) Point-to-Point Service (Cont'd)

(J) Modification of Access Service (Cont'd)

If the customer still desires the Access Order modification, the Telephone Company will schedule a new service date. All charges for Access Order modifications will apply on a per occurrence basis as described in Section 5.2.2.

(K) Shared Use

Shared use occurs when Special Access Service and Switched Access Service are provided over the same DS1 or DS3 facilities or SONET based services through a common interface. The facility will be ordered, provided, and rated as Special Access Service (e.g., Channel Termination, DS3 Service Packages, DS3 Service Channels, Channel Mileage Terminations and Channel Mileage, as appropriate, and Multiplexing).

The nonrecurring charge that applies when the Shared Use Facility is installed will be the nonrecurring charge associated with the installation of the appropriate Special Access DS1 or DS3 facility or SONET based service. Individual service (i.e., Switched or Special Access) nonrecurring charges will not apply to the individual channels of the Shared Use Facility. The practice known as "ratcheting" (to apply non-Special Access rates on a proportional basis) shall not apply in any circumstance. (C) | (C)

(L) Jointly Provided Service

Jointly Provided Service is also referred to as "meet-point-billing" arrangements. The service consists of one end of an OCN Point-to-Point circuit located in one exchange telephone company operating territory and the other end of service located in another exchange telephone company operating territory.

(M) Ordering Options and Conditions

The ordering options and conditions section sets forth the regulations and order related charges for Access Orders for Switched and Special Access Services and Specialized Services and Arrangements and Planned Facilities Orders for Switched Access Services as described in Section 5.

ACCESS SERVICE

7. Special Access Service

7.2 Service Descriptions (Cont'd)

7.2.10 Optical Carrier Network (OCN) Point-to-Point Service (Cont'd)

(N) Upgrade to OCN Point-to-Point from lower speeds

Customers with one, three or five year[/1/] OCN Point-to-Point TPPs may at any time upgrade OCN Point-to-Point service (e.g., OC-48 to OC-192) without incurring the Termination Liability charge, providing the following criteria are met:

- The customer subscribes to a Term Pricing Plan period that is equal to, or greater than 12 months;
- The expiration date for the new Term Pricing Plan period[/1/] is beyond the end of the original Term Pricing Plan period;
- No lapse in service occurs;
- 100% of any waived or unamortized nonrecurring charges will apply, when applicable;
- The monthly rates for the new service(s) will be those rates in effect at the time the new service(s) is/are installed;
- The new service is provided between the same customer locations and with the same customer of record as the disconnected service;
- The billed monthly recurring revenue for the new service is equal to or greater than the billed monthly recurring revenue remaining in the service being converted.

[/1/] Effective on August 21, 2018, AT&T will no longer offer term plans longer than 36 months, including any renewals, extensions or conversions of existing term commitments. (T) (T)

7. Special Access Service (Cont'd)

7.2 Service Descriptions (Cont'd)

7.2.11 OC-3, OC-12, OC-48 and OC-192 Dedicated Ring/2/ (C)

(A) Basic Service Description

(1) General

OC-3, OC-12, OC-48 and OC-192 Dedicated Ring/1/ provides a customer a dedicated custom network. The network is in a ring architecture including sub-rings or Arc sub-rings provisioned on Next Generation SONET equipment, designed to provide increased reliability and functionality connecting multiple customer designated locations and specified Telephone Company Central Offices (COs) via self healing network designs. Dedicated SONET Rings OC-3, OC-12, OC-48 and OC-192 are available via Self-Healing Uni-Directional Path Switched Rings (UPSR); additionally, OC-48 and OC-192 are available via Self-Healing Bi-Directional Line Switched Rings (BLSR). A sub-ring is a lower speed ring made up of two or more sub-ring Nodes operating off the higher speed main ring. An Arc sub-ring is lower speed ring made up of one or more Arc sub-ring nodes operating off the higher speed main ring. Dedicated Ring will provide 50 millisecond protection switching after fault detection to assure 100 percent availability of the services on the ring. Dedicated Ring/1/ is provided where appropriate SONET facilities are available. Where facilities are not available, Special Construction may apply.

Dedicated Ring/1/ is an alternative to OC-3, OC-12 and OC-48 point-to-point service between multiple customer locations. Rate elements include nodes, ports, mileage between nodes, regenerators, Optical to Electrical DS1 add/drop capability and Optical OC-48 add/drop capability. Rates are specified in Section 7.5.11.

Existing customers with point-to-point OC-3, OC-12 and OC-48 may upgrade to Dedicated Ring/1/ without termination liability.

A service interruption will result in a credit equal to one month's bill for the individual port-to-port connection involved. An interruption of service will start when an inoperative service is reported to the Telephone Company and end when the service is operative. In any month, as a result of an interruption, the total credit per rate element of the interrupted service may not exceed 100 percent of the monthly charge for that particular rate element.

Customers may choose to accept a ring without diversity (i.e., no dual entrance), or prior to the cable diversity being available. In this situation (i.e., temporary or permanent unprotected Dedicated Ring Service/1/), effective for new customers after January 16, 2004, the customer may accept the ring without diversity. Credits for the unprotected portion of the ring will not apply until diversity is implemented on the ring.

/1/ Effective on August 21, 2018, AT&T will no longer offer term plans longer than 36 months, including any renewals, extensions or conversions of existing term commitments.

/2/ Effective on or after December 1, 2021, neither new nor existing customers will be permitted to purchase new OC3, OC12, OC48 and OC192 Dedicated Ring (Service). In addition, (A) Service Payment Plans greater than 12-months in length will no longer be available; and (B) requests to move, add change, upgrade, or downgrade existing Service arrangements will not be accepted, with the following exceptions: (1) existing customers will be permitted to modify their existing Service and will be able to add new circuits to their existing Service, but will not be permitted to add new nodes in any locations; and (2) any such new circuits will be subject to the customer's existing term payment plan or term agreement for the Service to which they are added. Following the expiration of a customer's existing term agreement, Service will be provided on a month-to-month basis at the applicable Monthly rates until the Service is discontinued. (N)
Effective November 30, 2023, unless specified to the contrary in their existing Service agreements, existing customers may not renew Term Payment Plans or term agreements for Service. In addition, no move, add, or change orders of any type will be accepted. (N)

7. Special Access Service (Cont'd)

7.2 Service Descriptions (Cont'd)

7.2.11 OC-3, OC-12, OC-48 and OC-192 Dedicated Ring/3/ (Cont'd) (C)

(B) Dedicated Ring Configuration

(1) Nodes

The ring will provide connectivity to multiple customer designated locations (nodes). However, a ring must have a minimum of two nodes, excluding sub-ring nodes. At least one node must be a Telephone Company CO node. A maximum of 16 nodes including regenerators will be allowed per ring.

The Telephone Company reserves the right to determine the order of the nodes on the ring.

When a customer premises node is located in the same building as a CO node, diversity between the two nodes may not be available.

If a customer, collocates two customer premises nodes of the same speed, on the same dedicated ring, on the same premises, the additional node will be billed as shown in Section 7.5.11. This option does not provide diversity between these two collocated nodes and the rest of the ring.

If a customer has one or more additional OC-48 Dedicated Rings/2/ within a LATA, the Customer Premises Node, Central Office Node and the OC-48 Add/Drop Capability rate elements utilized on the additional OC-48 Dedicated Ring(s) and collocated with like primary OC-48 Dedicated Ring rate elements as described below will be billed as "Plus"/1/ as shown in Section 7.5.11. All existing requirements associated with Ameritech Dedicated Ring Service/2/ apply to additional rings. The eligibility requirements for the "Plus"/1/ rates are as follows:

The primary dedicated ring is defined as the dedicated ring with the earliest installation date. If the primary dedicated ring is terminated by the customer and the customer still has two or more dedicated rings, the remaining dedicated ring with the earliest installation date will be designated as the new primary dedicated ring. If there are any additional dedicated rings, the nodes and add/drop capability that are common with the new primary dedicated ring will be billed as "Plus"/1/ nodes and "Plus"/1/ add/drop capability.

/1/ Effective 04/08/06, the OC-48 "Plus" feature will no longer be available to new customers. There will be no change to existing customers.

/2/ Effective on August 21, 2018, AT&T will no longer offer term plans longer than 36 months, including any renewals, extensions or conversions of existing term commitments.

/3/ Effective on or after December 1, 2021, neither new nor existing customers will be permitted to purchase new OC3, OC12, OC48 and OC192 Dedicated Ring Service (Service). In addition, (A) Service Payment Plans greater than 12-months in length will no longer be available; and (B) requests to move, add, change, upgrade, or downgrade existing Service arrangements will not be accepted, with the following exceptions: (1) existing customers will be permitted to modify their existing Service and will be able to add new circuits to their existing Service, but will not be permitted to add new nodes in any locations; and (2) any such new circuits will be subject to the customer's existing term payment plan or term agreement for the Service to which they are added. Following the expiration of a customer's existing term agreement, Service will be provided on a month-to-month basis at the applicable Monthly rates until the Service is discontinued. (N)
Effective November 30, 2023, unless specified to the contrary in their existing Service agreements, existing customers may not renew Term Payment Plans or term agreements for Service. In addition, no move, add, or change orders of any type will be accepted. (N)

7. Special Access Service (Cont'd)

7.2 Service Descriptions (Cont'd)

7.2.11 OC-3, OC-12, OC-48 and OC-192 Dedicated Ring/3/ (Cont'd) (C)

(B) Dedicated Ring Configuration (Cont'd)

(1) Nodes (Cont'd)

If the primary OC-48 Dedicated Ring/2/ has either two or three nodes, then at least two nodes (excluding sub-ring or Arc sub-ring nodes) with separate addresses must be common between the primary OC-48 Dedicated Ring/2/ and the additional OC-48 Dedicated Ring(s)/2/. At least one of the common nodes must be a central office node.

If the primary OC-48 Dedicated Ring/2/ has four or more nodes, then at least three nodes (excluding sub-ring or Arc sub-ring nodes) with separate addresses must be common between the primary OC-48 Dedicated Ring/2/ and the additional OC-48 Dedicated Ring/2/. At least one of the common nodes must be a central office node.

The customer will be billed time and material for any additional charges incurred by the Telephone Company in locating Company equipment at the customer premises.

Moves of Dedicated Ring/2/ nodes requested by the customer will be billed time and material for charges incurred. No change in the billing period is required. Termination Liability charges will not apply to moves of Dedicated Ring/2/ nodes. If an additional location, monthly node is placed to facilitate migration of services to the new node location, monthly node charges will apply to both the additional node and the node being moved during the period for service transition.

(a) Direct Drop Node/1/

An optional Direct Drop Node (DDN) is available on an OC-12 dedicated ring/2/. This Node has direct add/drop capability not to exceed 3 DS3s or its equivalent.

The remaining bandwidth of the OC-12 ring continues on through the Node to another drop point on the ring. Use of the Direct Drop Node allows customers to drop DS1s directly from the Node without the need for the Optical to Electrical DS1 Add/Drop Capability option.

OC-12 nodes and OC-12 DDNs may be used together in making up an OC-12 dedicated ring/2/. A DS1 that enters the ring via a port on a Direct Drop Node must also exit via a port on another Direct Drop Node (DDN on - DDN off). A DS3 that enters the ring via a port on a Direct Drop Node may exit via a port on either a Direct Drop Node or OC-12 node. Direct drop node is not available in a two-node ring configuration.

/1/ Effective 04/08/06, the Direct Drop Node feature will no longer be available to new customers. There will be no change to existing customers.

/2/ Effective on August 21, 2018, AT&T will no longer offer term plans longer than 36 months, including any renewals, extensions or conversions of existing term commitments.

/3/ Effective on or after December 1, 2021, neither new nor existing customers will be permitted to purchase new OC3, OC12, OC48 and OC192 Dedicated Ring Service (Service). In addition, (A) Service Payment Plans greater than 12-months in length will no longer be available; and (B) requests to move, add, change, upgrade, or downgrade existing Service arrangements will not be accepted, with the following exceptions: (1) existing customers will be permitted to modify their existing Service and will be able to add new circuits to their existing Service, but will not be permitted to add new nodes in any locations; and (2) any such new circuits will be subject to the customer's existing term payment plan or term agreement for the Service to which they are added. Following the expiration of a customer's existing term agreement, Service will be provided on a month-to-month basis at the applicable Monthly rates until the Service is discontinued. (N)
Effective November 30, 2023, unless specified to the contrary in their existing Service agreements, existing customers may not renew Term Payment Plans or term agreements for Service. In addition, no move, add, or change orders of any type will be accepted. (N)

7. Special Access Service (Cont'd)

7.2 Service Descriptions (Cont'd)

7.2.11 OC-3, OC-12, OC-48 and OC-192 Dedicated Ring/3/ (Cont'd) (C)

(B) Dedicated Ring Configuration (Cont'd)

(1) Nodes (Cont'd)

(b) Sub-Ring Node

A sub-ring node is a lower speed optical extension off a main ring. It traverses one or more main ring nodes via the use of OC-N port connections on and off the main ring. The primary use of sub-ring nodes is to provide the ability to fully utilize the bandwidth around the ring when the customer requires DS1/VT1.5 circuit paths.

An optional sub-ring node is available at OC-3, OC-12 and OC-48 speeds from an OC-192 main ring. A sub-ring node may only connect to the main ring at the same or an adjacent main ring node. A sub-ring node may not connect directly to another sub-ring node/1/.

Any service that enters the main ring via a port on a sub-ring node must also exit via a port on another sub-ring node (sub-ring on - sub-ring off/1/. Cascading sub-rings are not allowed off a main ring. Service circuits may not be established between sub-ring nodes connecting to the same main ring node or between a sub-ring node and a port on the same main ring node to which it connects.

Each sub-ring must be implemented as an OC-M on an OC-N ring with full complement of STS-1s, 3 or 12 depending on the bandwidth of the sub-ring, appearing together at all associated sub-ring nodes on a given sub-ring.

OC-3 sub-rings and OC-12 DDNs may not be combined on an OC-12 main ring. OC-12 sub-rings and OC-12 DDNs may be combined on a sub-ring connected to an OC-48 main ring.

Two OC-N ports and associated node charges apply for each sub-ring node connected to the main ring, as well as applicable mileage for the sub-ring applies.

A sub-ring node which is collocated with a main ring node at the customers premises (for the same dedicated ring/2/) will be billed as an "Additional Node" per Section 7.5.11 (A).

A sub-ring is not available with a two-node main ring configuration.

A sub-ring node is only available in the Uni-Directional Path Switched Ring (UPSR) mode.

/1/ This restriction does not apply for Next Generation SONET equipment.

/2/ Effective on August 21, 2018, AT&T will no longer offer term plans longer than 36 months, including any renewals, extensions or conversions of existing term commitments.

/3/ Effective on or after December 1, 2021, neither new nor existing customers will be permitted to purchase new OC3, OC12, OC48 and OC192 Dedicated Ring Service (Service). In addition, (A) Service Payment Plans greater than 12-months in length will no longer be available; and (B) requests to move, add, change, upgrade, or downgrade existing Service arrangements will not be accepted, with the following exceptions: (1) existing customers will be permitted to modify their existing Service and will be able to add new circuits to their existing Service, but will not be permitted to add new nodes in any locations; and (2) any such new circuits will be subject to the customer's existing term payment plan or term agreement for the Service to which they are added. Following the expiration of a customer's existing term agreement, Service will be provided on a month-to-month basis at the applicable Monthly rates until the Service is discontinued. (N)
Effective November 30, 2023, unless specified to the contrary in their existing Service agreements, existing customers may not renew Term Payment Plans or term agreements for Service. In addition, no move, add, or change orders of any type will be accepted. (N)

ACCESS SERVICE

7. Special Access Service (Cont'd)

7.2 Service Descriptions (Cont'd)

7.2.11 OC-3, OC-12, OC-48 and OC-192 Dedicated Ring[/1/] (Cont'd) (C)

(B) Channel Configuration (Cont'd)

(1) Nodes (Cont'd)

(c) Arc Sub-Ring Node

ARC sub-ring nodes are only available on Next Generation SONET equipment with service installed after November 21, 2007. An Arc sub-ring node is a lower speed optical extension off a main ring. It connects to one main ring node via the use of OC-N port connections from and to a main ring. The primary use of Arc sub-ring nodes is to add other locations to the ring that will utilize minimal amounts of bandwidth from the main ring.

Arc sub-rings are only available off of UPSR main rings. Arc sub-rings are only available where facilities and/or operating conditions permit, as determined by the Telephone Company.

An optical Arc sub-ring node is available at OC-3, OC-12 and OC-48 speeds from an OC-192 main ring, OC-3 and OC-12 speeds from an OC-48 main ring, and OC-3 speed from an OC-12 main ring. An Arc sub-ring node may connect to the main ring at any main ring node.

Cascading Arc sub-rings are not allowed off a main ring. Services entering an Arc sub-ring node cannot drop from the directly connecting main ring node (hairpinning).

More than one Arc sub-ring may be added to a main ring. Each Arc sub-ring must be implemented as an OC-M on an OC-N ring with a full compliment of STS-1s, 3s or 12s, depending on the bandwidth of the Arc sub-ring, appearing together at all associated Arc sub-ring nodes on a given Arc sub-ring.

Two OC-N ports apply for each Arc sub-ring node connected to the main ring. A node charge applies for each Arc sub-ring location. Mileage charges are applicable when the sub-ring is in a different location than the main ring.

An Arc sub-ring node which is collocated in the same room with a main ring node at the customer's premises (for the same dedicated ring) will be billed as an "Additional Node."

Arc sub-rings do not reduce the bandwidth capacity of the main ring. As services are added to the main or sub-ring, only the bandwidth capacity of the service is reduced.

Arc sub-rings can be provisioned in two basic configurations:

1. Single-node, single-homed ARC
2. Multi-node, single-homed ARC

Circuit traffic can be added/dropped from an Arc sub-ring node to another Arc sub-ring node within the same Arc (known as intra-ARC), or between ARCs (known as inter-ARC). Intra-ARC circuits can only be provisioned as unprotected due to technical limitations. Circuit traffic can also originate on an Arc sub-ring node and route across and drop from a main ring node, but only when UPSR protection schemes are used.

/1/ Effective on or after December 1, 2021, neither new nor existing customers will be permitted to purchase new OC3, OC12, OC48 and OC192 Dedicated Ring Service (Service). In addition, (A) Service Payment Plans greater than 12-months in length will no longer be available; and (B) requests to move, add, change, upgrade, or downgrade existing Service arrangements will not be accepted, with the following exceptions: (1) existing customers will be permitted to modify their existing Service and will be able to add new circuits to their existing Service, but will not be permitted to add new nodes in any locations; and (2) any such new circuits will be subject to the customer's existing term payment plan or term agreement for the Service to which they are added. Following the expiration of a customer's existing term agreement, Service will be provided on a month-to-month basis at the applicable Monthly rates until the Service is discontinued. (N)

Effective November 30, 2023, unless specified to the contrary in their existing Service agreements, existing customers may not renew Term Payment Plans or term agreements for Service. In addition, no move, add, or change orders of any type will be accepted. (N)

7. Special Access Service (Cont'd)

7.2 Service Descriptions (Cont'd)

7.2.11 OC-3, OC-12, OC-48 and OC-192 Dedicated Ring/3/ (Cont'd) (C)

(B) Channel Configuration (Cont'd)

(1) Nodes (Cont'd)

(d) Re-Map Node/1/

A Re-Map node is a ring node that is pre-equipped and dedicated to customer traffic that is re-mapped/re-routed to it by Ameritech upon notification by the customer of a service outage at another customer premises node on the same dedicated ring/2/. Re-Map is designed as a temporary service for disaster recovery purposes only. No "normal" customer traffic will be added/dropped at the Re-Map node unless the Re-Map service is activated.

(e) Flex-Ring

Flex-Ring feature provides double the standard bandwidth levels for the Dedicated Ring/2/ product. The customer has the ability to double their bandwidth without ordering the next higher ring service.

(1) Double-Rings

Double Rings will provide the ability to place two rings on the same DSRS equipment. Nodes of the second ring must be the same as the first ring. The second OC-12 and OC-48 ring is available and will require a new TPP upon the upgrade. All nodes on the ring will be at the same level. The additional higher speed optics may contribute to slot exhaustion on the main node. The standard features and components (mileage, ports, etc.) are available as described in Section 7.2.11 (B). The second ring will require another pair of fibers so mileage will apply to both rings. There will only be two rings available on a single SONET ring equipment. The second ring's line rate will be the same as the first ring.

Flex-Ring is not available with OC-192.

/1/ Effective August 10, 2013, availability of Re-Map nodes is limited to Re-Map nodes that are in service or have been ordered prior to August 10, 2013.

/2/ Effective on August 21, 2018, AT&T will no longer offer term plans longer than 36 months, including any renewals, extensions or conversions of existing term commitments.

/3/ Effective on or after December 1, 2021, neither new nor existing customers will be permitted to purchase new OC3, OC12, OC48 and OC192 Dedicated Ring Service (Service). In addition, (A) Service Payment Plans greater than 12-months in length will no longer be available; and (B) requests to move, add, change, upgrade, or downgrade existing Service arrangements will not be accepted, with the following exceptions: (1) existing customers will be permitted to modify their existing Service and will be able to add new circuits to their existing Service, but will not be permitted to add new nodes in any locations; and (2) any such new circuits will be subject to the customer's existing term payment plan or term agreement for the Service to which they are added. Following the expiration of a customer's existing term agreement, Service will be provided on a month-to-month basis at the applicable Monthly rates until the Service is discontinued. Effective November 30, 2023, unless specified to the contrary in their existing Service agreements, existing customers may not renew Term Payment Plans or term agreements for Service. In addition, no move, add, or change orders of any type will be accepted. (N) (N)

ACCESS SERVICE

7. Special Access Service (Cont'd)
7.2 Service Descriptions (Cont'd)
7.2.11 OC-3, OC-12, OC-48 and OC-192 Dedicated Ring/3/ (Cont'd) (C)
(B) Dedicated Ring Configuration (Cont'd)
(2) Add/Drop Capability (Cont'd)
(a) OC-48 Add/Drop Capability

This provides the capability to add/drop lower speed channels from an OC-48 Dedicated Ring/2/ node location via OC-12 and OC-3 ports. OC-48 Add/Drop Capability at an OC-48 Dedicated Ring Service/2/ node location will support one quarter of the port capability of OC-48 ring bandwidth. Up to four OC-48 Add/Drop Capability options may be provided at a node with each option supporting one OC-12 port, up to four OC-3 ports, up to twelve DS3 ports, or equivalent combination of OC-3 and DS3 ports, or up to twelve 100 Mbps (STS-1) Ethernet ports or up to four 100 Mbps (STS-3c) Ethernet ports or up to eight 1 Gbps (STS-1) Ethernet ports or up to four 1 Gbps (STS-3c) Ethernet ports or one 1Gbps (STS-12c) Ethernet port.

OC-48 Add/Drop Capability associated with OC-48 Dedicated Ring/2/ nodes that qualify as "Plus"/1/ nodes as defined in Section 7.2.11(B)(1) preceding will be billed as "Plus"/1/ as shown in Section 7.5.11.

For OC-48 SONET Rings established prior to 04/7/05, the Add/DropCapability charge is applied per quarter (12 DS-3 equivalent) port capability of ring. Customers may upgrade their ring when new TPP/2/ is equal to or greater than their existing TPP and the new MRC revenue is equal to or greater than their existing MRC revenue.

For OC-48 SONET Rings established after 04/7/05, the Add/Drop Capability charge is a monthly, per-node charge that will be applied once a node has 25 or more DS-3 ports. Effective November 16, 2020, regarding Add/Drop capabilities, if the number of ports falls below 25 DS-3 ports per OC-48 node, the customer must notify its Telephone Company account team/sales representative, in writing, to eliminate the charge. Upon receipt of the customer's notice and upon eligibility confirmation, the Telephone Company will remove the charge within two billing cycles.

(b) OC-192 Add/Drop Capability

This provides the capability to add/drop lower speed channels from an OC-192 Dedicated Ring/2/ node location via OC-48 or OC-12. OC-192 Add/Drop Capability at an OC-192 Dedicated Ring Service/2/ node location will support up to four OC-48 or OC-48c ports, or up to sixteen OC-12 or OC-12c ports, or up to sixty four OC-3 or OC-3c ports, or up to 192 DS3 ports or various combinations not to exceed 192 STS-1 equivalents, or up to forty-eight 100 Mbps (STS-1) Ethernet ports or up to sixteen 100 Mbps (STS-3c) Ethernet ports or up to thirty-two 1 Gbps (STS-1) Ethernet ports or up to sixteen 1 Gbps (STS-3c) Ethernet ports or up to two 1 Gbps (STS-12c) ports or up to two 1 Gbps (STS-24c) ports. The OC-192 Add/Drop Capability charge is applied to all nodes, excluding regenerators and CO nodes without drop ports.

Effective November 16, 2020, regarding Add/Drop capabilities, if the number of ports falls below the minimum requirement per node, the customer must notify its Telephone Company account team/sales representative, in writing, to eliminate the charge. Upon receipt of the customer's notice and upon eligibility confirmation, the Telephone Company will remove the charge within two billing cycles.

/1/ Effective 04/08/06, the OC-48 "Plus" feature will no longer be available to new customers. There will be no changes to existing customers.

/2/ Effective on August 21, 2018, AT&T will no longer offer term plans longer than 36 months, including any renewals, extensions or conversions of existing term commitments.

/3/ Effective on or after December 1, 2021 (as permitted by the FCC), neither new nor existing customers will be permitted to purchase new OC3, OC12, OC48 and OC192 Dedicated Ring Service ("Service"). In addition, (A) Service Payment Plans greater than 12-months in length will no longer be available; and (B) requests to move, add, change, upgrade, or downgrade existing Service arrangements will not be accepted, with the following exceptions: (1) existing customers will be permitted to modify their existing Service and will be able to add new circuits to their existing Service, but will not be permitted to add new nodes in any locations; and (2) any such new circuits will be subject to the customer's existing term payment plan or term agreement for the Service to which they are added. Following the expiration of a customer's existing term agreement, Service will be provided on a month-to-month basis at the applicable Monthly rates until the Service is discontinued. (N)

Effective November 30, 2023, unless specified to the contrary in their existing Service agreements, existing customers may not renew Term Payment Plans or term agreements for Service. In addition, no move, add, or change orders of any type will be accepted. (N)

ACCESS SERVICE

7. Special Access Service (Cont'd)

7.2 Service Descriptions (Cont'd)

7.2.11 OC-3, OC-12, OC-48 and OC-192 Dedicated Ring/2/ (Cont'd) (C)

(B) Dedicated Ring Configuration (Cont'd)

(3) Ports

The type of ports available on the family of rings is DS3, STS-1, EC-1, OC-3, OC-3c, OC-12, OC-12c, OC-48, OC-48c, OC-192 100 Mbps (STS-1) Ethernet, 100 Mbps (STS-3c) Ethernet, 1 Gbps (STS-1) Ethernet, 1 Gbps (STS-3c) Ethernet, 1 Gbps (STS-12c) Ethernet and 1 Gbps (STS-24c) Ethernet. The associated family of riding services are Point-to-Point OC-3, OC-3c, OC-12, OC-12c, OC-48 and OC-48c/1/.

Ethernet over SONET (EoS) allows the efficient transport of ethernet frames using SONET. Ethernet ports will be available in bandwidths up to the ethernet interface of 100 Mbps or 1 Gbps on Dedicated Ring Services/1/ as set forth in respective tariffs. As SONET bandwidths will be preset, the customer will be unable to transmit data (including any bursts) beyond these preset SONET bandwidths. Interfaces of 100 Mbps Ethernet or 1 Gbps Ethernet are available only to customers with Next Generation SONET equipment. Access into the Telephone Company's Ethernet ports must conform to industry standards and specifications as described in technical publication SBC-TP-76412-000. Only Single-Mode Fiber is available in the Central Office. The EoS line rates, defined in Section 7.5.11 (D), are based on the theoretical SONET payload line rates as per GR-253-CORE, Issue 4. These values are not representative of the true Ethernet transport capacity of the EoS circuit.

/1/ Effective on August 21, 2018, AT&T will no longer offer term plans longer than 36 months, including any renewals, extensions or conversions of existing term commitments.

/2/ Effective on or after December 1, 2021, neither new nor existing customers will be permitted to purchase new OC3, OC12, OC48 and OC192 Dedicated Ring Service (Service). In addition, (A) Service Payment Plans greater than 12-months in length will no longer be available; and (B) requests to move, add, change, upgrade, or downgrade existing Service arrangements will not be accepted, with the following exceptions: (1) existing customers will be permitted to modify their existing Service and will be able to add new circuits to their existing Service, but will not be permitted to add new nodes in any locations; and (2) any such new circuits will be subject to the customer's existing term payment plan or term agreement for the Service to which they are added. Following the expiration of a customer's existing term agreement, Service will be provided on a month-to-month basis at the applicable Monthly rates until the Service is discontinued. (N)
Effective November 30, 2023, unless specified to the contrary in their existing Service agreements, existing customers may not renew Term Payment Plans or term agreements for Service. In addition, no move, add, or change orders of any type will be accepted. (N)

ACCESS SERVICE

7. Special Access Service (Cont'd)

7.2 Service Descriptions (Cont'd)

7.2.11 OC-3, OC-12, OC-48 and OC-192 Dedicated Ring/3/ (Cont'd) (C)

(B) Dedicated Ring Configuration (Cont'd)

(3) Ports (Cont'd)

Accepted interfaces are as follows:

	OC-3 Node	OC-12 Node	OC-48 Node	OC-192 Node
DS1 Ports	X (Max. 84/Node)	x (Max. 84/OC-3 or OC-3c Port)/1/	x (Max. 84/OC-3 or OC-3c Port)/1/	x (Max. 84/OC-3 Port)
DS3 Ports	X (Max. 3/Node)	x (Max. 12/Node)	x (Max. 48/Node)	x (Max. 192/Node)
EC-1 Ports	X (Max. 3/Node)	x (Max. 12/Node)	x (Max. 48/Node)	x (Max. 192/Node)
OC-3 or OC-3c Ports/2/	X (Max. 1/Node)	x (Max. 4/Node)	x (Max. 16/Node)	x (Max. 64/Node)
OC-12, or OC-12c Ports/2/	N/A	x (Max. 1/Node)	x (Max. 4/Node)	x (Max. 16/Node)
OC-48, or OC-48c Ports/2/	N/A	N/A	x (Mas. 1/Node)	x (Max. 4/Node)4
OC-192 Ports/2/	N/A	N/A	N/A	x (Max. 1/Node)
100 Mbps (STS-1) Ethernet Ports	X (Max. 3/Node)	x (Max. 12/Node)	x (Max. 48/Node)	x (Max. 192/Node)
100 Mbps (STS-3c) Ethernet Ports	N/A	x (Max. 4/Node)	x (Max. 16/Node)	x (Max. 64/Node)
1Gbps (STS-1) Ethernet Ports	X (Max. 3/Node)	x (Max. 12/Node)	x (Max. 48/Node)	x (Max. 192/Node)
1Gbps (STS-3c) Ethernet Ports	N/A	x (Max. 4/Node)	x (Max. 16/Node)	x (Max. 64/Node)
1Gbps (STS-12c) Ethernet Ports	N/A	N/A	x (Max. 4/Node)	x (Max. 16/Node)
1Gbps (STS-24c) Ethernet Ports	N/A	N/A	x (Max. 2/Node)	x (Max. 8/Node)
10/100 BaseT Ethernet Port				
VT1.5-1v (1.6 Mbps)	X (Max. 84/Node)	X (Max. 84/OC-3)	X (Max. 84/OC-3)	X (Max. 84/OC-3)
VT1.5-2v (3.2 Mbps)	X (Max. 42/Node)	X (Max. 42/OC-3)	X (Max. 42/OC-3)	X (Max. 42/OC-3)
VT1.5-3v (4.8 Mbps)	X (Max. 28/Node)	X (Max. 28/OC-3)	X (Max. 28/OC-3)	X (Max. 28/OC-3)
VT1.5-4v (6.4 Mbps)	X (Max. 21/Node)	X (Max. 21/OC-3)	X (Max. 21/OC-3)	X (Max. 21/OC-3)
VT1.5-5v (8.0 Mbps)	X (Max. 16/Node)	X (Max. 16/OC-3)	X (Max. 16/OC-3)	X (Max. 16/OC-3)
VT1.5-6v (9.6 Mbps)	X (Max. 14/Node)	X (Max. 14-OC-3)	X (Max. 14-OC-3)	X (Max. 14-OC-3)
VT1.5-7v (11.2 Mbps)	X (Max. 12/Node)	X (Max. 12/OC-3)	X (Max. 12/OC-3)	X (Max. 12/OC-3)
VT1.5-8v (12.40 Mbps)	X (Max. 10/Node)	X (Max. 10/OC-3)	X (Max. 10/OC-3)	X (Max. 10/OC-3)
VT1.5-10v (16.0 Mbps)	X (Max. 8/Node)	X (Max. 8/OC-3)	X (Max. 8/OC-3)	X (Max. 8/OC-3)
VT1.5-13v (20.8 Mbps)	X (Max. 6/Node)	X (Max. 6/OC-3)	X (Max. 6/OC-3)	X (Max. 6/OC-3)
STS-1-1v (48.38 Mbps)	X (Max. 3/Node)	X (Max. 12/Node)	X (Max. 48/Node)	X (Max. 192/Node)
STS-1-2v (96.77 Mbps)	X (Max. 1/Node)	X (Max. 6/Node)	X (Max. 24/Node)	X (Max. 96/Node)
1000 BaseSX/LX Ethernet Port				
STS-1-1v (48.38 Mbps)	X (Max. 3/Node)	X (Max. 12/Node)	X (Max. 48/Node)	X (Max.192/Node)

/1/ Optical to Electrical DS1 add/drop capability as described in 7.2.11(B)(5) is needed along with an OC-3 port unless the customer has chosen an OC-12 DDN.

/2/ OC-3 and OC-3c ports support both OC-3 and OC-3c bandwidths. OC-12 and OC-12c ports support both OC-12 and OC-12c Bandwidths. OC-48 and OC-48c ports support both OC-48 and OC-48c bandwidths. OC-192 and OC-192c ports support both OC-192 and OC-192c bandwidths.

/3/ Effective on or after December 1, 2021, neither new nor existing customers will be permitted to purchase new OC3, OC12, OC48 and OC192 Dedicated Ring Service (Service). In addition, (A) Service Payment Plans greater than 12-months in length will no longer be available; and (B) requests to move, add, change, upgrade, or downgrade existing Service arrangements will not be accepted, with the following exceptions: (1) existing customers will be permitted to modify their existing Service and will be able to add new circuits to their existing Service, but will not be permitted to add new nodes in any locations; and (2) any such new circuits will be subject to the customer's existing term payment plan or term agreement for the Service to which they are added. Following the expiration of a customer's existing term agreement, Service will be provided on a month-to-month basis at the applicable Monthly rates until the Service is discontinued. (N)
Effective November 30, 2023, unless specified to the contrary in their existing Service agreements, existing customers may not renew Term Payment Plans or term agreements for Service. In addition, no move, add, or change orders of any type will be accepted. (N)

ACCESS SERVICE

7. Special Access Service (Cont'd)

7.2 Service Descriptions (Cont'd)

7.2.11 OC-3, OC-12, OC-48 and OC-192 Dedicated Ring/2/ (Cont'd) (C)

(B) Dedicated Ring Configuration (Cont'd)

(3) Ports (Cont'd)

Accepted Interfaces are as follows:

	OC-3 Node	OC-12 Node	OC-48 Node	OC-192 Node
STS-1-2v (96.77 Mbps)	X (Max. 1/Node)	X (Max. 6/Node)	X (Max. 24/Node)	X (Max. 96/Node)
STS-1-3v (145.15 Mbps)	X (Max. 1/Node)	X (Max. 4/Node)	X (Max. 16/Node)	X (Max. 64/Node)
STS-1-4v (193.54 Mbps)	N/A	X (Max. 3/Node)	X (Max. 12/Node)	X (Max. 48/Node)
STS-1-5v (241.92 Mbps)	N/A	X (Max. 2/Node)	X (Max. 9/Node)	X (Max. 38/Node)
STS-1-6v (290.30 Mbps)	N/A	X (Max. 2/Node)	X (Max. 8/Node)	X (Max. 32/Node)
STS 1-9v (435.46 Mbps)	N/A	X (Max. 1/Node)	X (Max. 5/Node)	X (Max. 21/Node)
STS-1-12v (580.61 Mbps)	N/A	X (Max. 1/Node)	X (Max. 4/Node)	X (Max. 16/Node)
STS-1-21v (1016.06 Mbps)	N/A	N/A	X (Max. 2/Node)	X (Max. 9/Node)
STS-3c-1v (149.76 Mbps)	N/A	X (Max. 4/Node)	X (Max. 16/Node)	X (Max. 64/Node)
STS-3c-2v (299.52 Mbps)	N/A	X (Max. 2/Node)	X (Max. 8/Node)	X (Max. 32/Node)
STS-3c-3v (449.28 Mbps)	N/A	X (Max. 1/Node)	X (Max. 5/Node)	X (Max. 21/Node)
STS-3c-4v (599.04 Mbps)	N/A	X (Max. 1/Node)	X (Max. 4/Node)	X (Max. 16/Node)
STS-3c-7v (1048.32 Mbps)	N/A	N/A	X (Max. 2/Node)	X (Max. 9/Node)

By using the existing OC-3 or OC-3c, OC-12 or OC-12c, or OC-48 or OC-48c Service/1/ and cross-connection capability, OC-3 or OC-3c point-to-point/1/ service may connect to an OC-3 or OC-3c port of an OC-12, OC-48, or OC-192 ring. OC-12 or OC-12c point-to-point service may connect to an OC-12 or OC-12c port of an OC-48, OC-192 ring, or OC-48. OC-48 or OC-48c point-to-point service may connect to an OC-48 or OC-48c port of an OC-192 ring located in a Company CO.

As described in Section 7.2.10 for OC-3, OC-3c Service, an OC-3 port will permit the connection of STS-1 channels to other STS-1 channels across the OC-12, OC-48 or OC-92 Dedicated Ring Service/1/ subject to the overall ring capacity limits described in Section 7.2.11 (B) (6). Also an STS-1 channel with DS1 payload mapping accessing an OC-12 Dedicated Ring/1/ using an OC-3 port may be connected to the Optical to Electrical DS1 add/drop capability for the purpose of connecting up to 28 DS1 ports. An STS-1 channel with DS3 payload mapping accessing the OC-12 or OC-48 Dedicated Ring/1/ using an OC-3 port may individually connect to a DS3 or EC-1 port.

/1/ Effective on August 21, 2018, AT&T will no longer offer term plans longer than 36 months, including any renewals, extensions or conversions of existing term commitments.

/2/ Effective on or after December 1, 2021, neither new nor existing customers will be permitted to purchase new OC3, OC12, OC48 and OC192 Dedicated Ring Service (Service). In addition, (A) Service Payment Plans greater than 12-months in length will no longer be available; and (B) requests to move, add, change, upgrade, or downgrade existing Service arrangements will not be accepted, with the following exceptions: (1) existing customers will be permitted to modify their existing Service and will be able to add new circuits to their existing Service, but will not be permitted to add new nodes in any locations; and (2) any such new circuits will be subject to the customer's existing term payment plan or term agreement for the Service to which they are added. Following the expiration of a customer's existing term agreement, Service will be provided on a month-to-month basis at the applicable Monthly rates until the Service is discontinued. (N)
Effective November 30, 2023, unless specified to the contrary in their existing Service agreements, existing customers may not renew Term Payment Plans or term agreements for Service. In addition, no move, add, or change orders of any type will be accepted. (N)

ACCESS SERVICE

7. Special Access Service (Cont'd)

7.2 Service Descriptions (Cont'd)

7.2.11 OC-3, OC-12, OC-48 and OC-192 Dedicated Ring/2/ (Cont'd) (C)

(B) Dedicated Ring Configuration (Cont'd)

(3) Ports (Cont'd)

When a customer orders a Re-Map node/1/, a minimum number of Re-Map ports must be equipped:

OC-3 28 DS1 Re-Map ports, or 1 DS3 Re-Map port

OC-12 28 DS1 Re-Map ports, or 3 DS3 Re-Map ports, or 1 OC-3 or OC-3c Re-Map port

OC-48 28 DS1 Re-Map ports, or 3 DS3 Re-Map ports, or 1 OC-3 or OC-3c Re-Map port, or 1 OC-12 Re-Map port

Re-Map node ports must be ordered in incremental blocks as described below:

Port Type

	DS1	DS3	OC-3 or OC-3c	OC-12 or OC-12c	OC-48	OC-192
OC-3 Ring	28, 56 or 84 (multiples of 28)	1, 2 or 3	N/A	N/A	N/A	N/A
OC-12 Ring	28, 56 or 84 (multiples of 28)	3, 6, 9… or 12	1, 2, 3 or 4	1	N/A	N/A
OC-48 Ring	28, 56 or 84 (multiples of 28)	3, 6, 9 ... or 48	1, 2, 3 ... or 16	1, 2, 3 or 4	1	N/A
OC-192 Ring	28, 56, or 84 (multiples of 28)	3, 6, 9…or 192	1, 2, 3, 16…or 64	1, 2, 3, 4…or 16	1, 2, 3 or 4	1

/1/ Effective August 10, 2013, availability of Re-Map nodes is limited to Re-Map nodes that are in service or have been ordered prior to August 10, 2013.

/2/ Effective on or after December 1, 2021, neither new nor existing customers will be permitted to purchase new OC3, OC12, OC48 and OC192 Dedicated Ring Service (Service). In addition, (A) Service Payment Plans greater than 12-months in length will no longer be available; and (B) requests to move, add, change, upgrade, or downgrade existing Service arrangements will not be accepted, with the following exceptions: (1) existing customers will be permitted to modify their existing Service and will be able to add new circuits to their existing Service, but will not be permitted to add new nodes in any locations; and (2) any such new circuits will be subject to the customer's existing term payment plan or term agreement for the Service to which they are added. Following the expiration of a customer's existing term agreement, Service will be provided on a month-to-month basis at the applicable Monthly rates until the Service is discontinued. (N)
Effective November 30, 2023, unless specified to the contrary in their existing Service agreements, existing customers may not renew Term Payment Plans or term agreements for Service. In addition, no move, add, or change orders of any type will be accepted. (N)

7. Special Access Service (Cont'd)

7.2 Service Descriptions (Cont'd)

7.2.11 OC-3, OC-12, OC-48 and OC-192 Dedicated Ring/3/ (Cont'd) (C)

(B) Dedicated Ring Configuration (Cont'd)

(3) Ports (Cont'd)

An OC-12 or OC-48 ring utilizing re-map requires an OC-3/2/ or OC-3c Re-Map/1/ port and DS1 Re-Map Add/Drop Capability to support DS1 port types. (An OC-3 or OC-3c Re-Map port and DS1 Re-Map Add/Drop Capability supports up to 84 DS1's.)

When utilizing an OC-12 Direct Drop Node for provisioning a re-map node, either 28 DS1 Re-Map ports or 1 DS3 Re-Map port will be the minimum required.

Transmux

DS3 Transmux is available on all speeds and provides the ability aggregate multiple DS1s to a DS3 within the SONET Ring and also on a single card. DS1s are aggregated across the SONET network and terminated into a single DS3 card at a ring node. The hand-off will be a channelized DS3. Aggregation of DS1s can occur across multiple DS3/STSs.

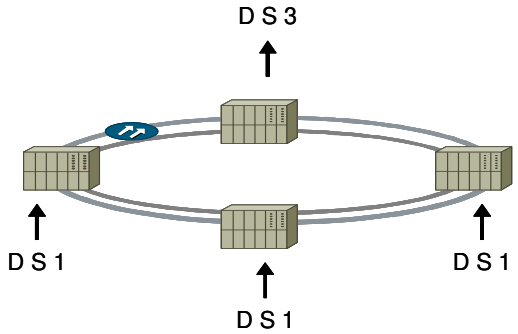

(i) Electrical Connection – Level 1 (EC-1)

EC-1 is an electrical interface that can transport up to 51.84 Mb of bandwidth in a concatenated format. The EC-1 port is available on an OC-3, OC-12, OC-48 and OC-192 ring/2/. For the above connection capacity charts, the quantity of EC-1 ports is equivalent to the connection capacity of a DS-3.

/1/ Effective August 10, 2013, availability of Re-Map nodes is limited to Re-Map nodes that are in service or have been ordered prior to August 10, 2013.

/2/ Effective on August 21, 2018, AT&T will no longer offer term plans longer than 36 months, including any renewals, extensions or conversions of existing term commitments.

/3/ Effective on or after December 1, 2021, neither new nor existing customers will be permitted to purchase new OC3, OC12, OC48 and OC192 Dedicated Ring Service (Service). In addition, (A) Service Payment Plans greater than 12-months in length will no longer be available; and (B) requests to move, add, change, upgrade, or downgrade existing Service arrangements will not be accepted, with the following exceptions: (1) existing customers will be permitted to modify their existing Service and will be able to add new circuits to their existing Service, but will not be permitted to add new nodes in any locations; and (2) any such new circuits will be subject to the customer's existing term payment plan or term agreement for the Service to which they are added. Following the expiration of a customer's existing term agreement, Service will be provided on a month-to-month basis at the applicable Monthly rates until the Service is discontinued. Effective November 30, 2023, unless specified to the contrary in their existing Service agreements, existing customers may not renew Term Payment Plans or term agreements for Service. In addition, no move, add, or change orders of any type will be accepted. (N) (N)

7. Special Access Service (Cont'd)

7.2 Service Descriptions (Cont'd)

7.2.11 OC-3, OC-12, OC-48 and OC-192 Dedicated Ring/2/ (Cont'd) (C)

(B) Dedicated Ring Configuration (Cont'd)

(4) Mileage

Mileage is the total airline distance between the serving wire center of each node involved on the ring. A one-mile minimum will be billed between nodes. A two-node ring configuration has a two-mile minimum - one mile from the wire center node to the customer premises node and one mile from the customer premises node to the wire center node.

In addition, interoffice transport can be connected between wire centers at a lower OC-N speed than the Dedicated Ring, if the transport is between a dedicated ring port and:

- a lower speed Add/Drop Function;
- a lower speed Local Distribution Channel;
- another lower speed Dedicated Ring Port; or
- a lower speed Cross-Connect

All of the above terminations must be the same speed as the transport.

(5) Optical to Electrical Add/Drop Capability

(a) Optical-to-Electrical DS1/1/ Add/Drop Capability allows an electrical DS1 to be derived from an optical OC-12, OC-48, or OC-192 ring by using this capability to add/drop the electrical DS1 from an OC-3 port.

For SONET Rings established after 04/7/05, the Optical-to-Electrical DS-1 Add/Drop Capability charge is applied when the 85th DS-1 port is applied per OC-12 node and when the 29th DS-1 port is required per OC-48 or OC-192 node. Additional charges wil apply per each increment of 84 DS-1 ports.

Effective November 16, 2020, regarding Add/Drop capabilities, if the number of ports falls below 85 DS-1 ports per OC-12 node or below 29 DS-1 ports per OC-48 or per OC 192, the customer must notify its Telephone Company account team/sales representative, in writing, to eliminate the charge. Upon receipt of the customer's notice and upon eligibility confirmation, the Telephone Company will remove the charge within two billing cycles.

(b) Optical-to-Electrical DS3 Add/Drop Capability allows an electrical DS3 to be derived from an OC-192 ring via an optical OC-3, OC-12 or, OC-48 shelf. The manner in which a DS3 is dropped will be designed based on forecast and equipment hierarchy.

Effective 06/15/06, DS-1 Optical-to-Electrical Add/Drop Capability will be available from an optical OC-192 shelf.

/1/ Optical-to-Electrical DS1 Add/Drop Capability as described in 7.2.11 (B) (5) (a) is needed along with an OC-3 port unless the customer has chosen an OC-12 DDN.

/2/ Effective on or after December 1, 2021, neither new nor existing customers will be permitted to purchase new OC3, OC12, OC48 and OC192 Dedicated Ring Service (Service). In addition, (A) Service Payment Plans greater than 12-months in length will no longer be available; and (B) requests to move, add, change, upgrade, or downgrade existing Service arrangements will not be accepted, with the following exceptions: (1) existing customers will be permitted to modify their existing Service and will be able to add new circuits to their existing Service, but will not be permitted to add new nodes in any locations; and (2) any such new circuits will be subject to the customer's existing term payment plan or term agreement for the Service to which they are added. Following the expiration of a customer's existing term agreement, Service will be provided on a month-to-month basis at the applicable Monthly rates until the Service is discontinued. Effective November 30, 2023, unless specified to the contrary in their existing Service agreements, existing customers may not renew Term Payment Plans or term agreements for Service. In addition, no move, add, or change orders of any type will be accepted. (N) (N)

ACCESS SERVICE

7. Special Access Service
7.2 Service Descriptions (Cont'd)
7.2.11 OC-3, OC-12, OC-48 and OC-192 Dedicated Ring/2/ (Cont'd) (C)
(B) Dedicated Ring Configuration (Cont'd)
(5) Optical to Electrical Add/Drop Capability (Cont'd)

For OC-192 SONET Rings established prior to 04/7/05, when electrical drops are required, the Optical-to-Electrical DS-3 Add/Drop Capability charge is applied in addition to the Add/Drop Capability charge as described in Section 7.2.11(B)(2)(b).

For OC-192 SONET Rings established after 04/7/05, the Optical-to-Electrical DS-3 Add/Drop capability charge is a monthly, per-node charge that will be applied once a node has 25 DS-3 ports Effective November 16, 2020, regarding Add/Drop capabilities, if the number of ports falls below 25 DS-3 ports per node, the customer must notify its Telephone Company account team/sales representative, in writing, to eliminate the charge. Upon receipt of customer's notice and upon eligibility confirmation, Telephone Company will remove the charge within two billing cycles.

(6) Dedicated Ring Regenerator

Regenerators provide essential detection and retransmission of SONET Optical 155.5.2 Mbps, 622.08 Mbps, 2488.32 Mbps and 9953.28 Mbps signals between nodes. Regenerators will only be provided as required by the Telephone Company when actual fiber facility distances between nodes exceed inter-nodal design limits. Regenerators will be located exclusively in Telephone Company COs and do not allow ports to access customer service connections.

(7) Dedicated Ring Connection Capacity

Maximum transport capacity of OC-3, OC-12, OC-48, and OC-192 Dedicated Ring Service/1/ is characterized by the total quantity of individual port-to-port connections allowed between all nodes on the ring. The DS3 Port connections shown below in this section can be exchanged with EC-1 Port connections.

For OC-3 Dedicated Ring Service/1/, the maximum ring capacity will be equal to one of the following combinations:

DS3 Port to DS3 Port Connections		DS1 Port to DS1 Port Connections
Three	and	None
Two	and	Up to 28
One	and	Up to 56
None	and	Up to 84

An OC-3 Sub-ring or Arc sub-ring provided as part of OC-12 or OC-48 Dedicated Ring Service/1/ has a maximum capacity equal to one of the above combinations.

For OC-3 Dedicated Ring Service/1/ and OC-3 Sub-rings or Arc sub-rings as part of OC-12 or OC-48 Dedicated Ring Service/1/, individual DS1 port-to-DS1 port and DS3 port-to-DS3 port connections capacities may be incrementally distributed between nodes on the ring in any manner.

/1/ Effective on August 21, 2018, AT&T will no longer offer term plans longer than 36 months, including any renewals, extensions or conversions of existing term commitments.

/2/ Effective on or after December 1, 2021, neither new nor existing customers will be permitted to purchase new OC3, OC12, OC48 and OC192 Dedicated Ring Service (Service). In addition, (A) Service Payment Plans greater than 12-months in length will no longer be available; and (B) requests to move, add, change, upgrade, or downgrade existing Service arrangements will not be accepted, with the following exceptions: (1) existing customers will be permitted to modify their existing Service and will be able to add new circuits to their existing Service, but will not be permitted to add new nodes in any locations; and (2) any such new circuits will be subject to the customer's existing term payment plan or term agreement for the Service to which they are added. Following the expiration of a customer's existing term agreement, Service will be provided on a month-to-month basis at the applicable Monthly rates until the Service is discontinued. (N)

Effective November 30, 2023, unless specified to the contrary in their existing Service agreements, existing customers may not renew Term Payment Plans or term agreements for Service. In addition, no move, add, or change orders of any type will be accepted. (N)

ACCESS SERVICE

7. Special Access Service (Cont'd)

7.2 Service Descriptions (Cont'd)

7.2.11 OC-3, OC-12, OC-48 and OC-192 Dedicated Ring/3/ (Cont'd) (C)

(B) Dedicated Ring Configuration (Cont'd)

(7) Dedicated Ring Connection Capacity (Cont'd)

For OC-12 Dedicated Ring Service/2/, the maximum ring capacity will be equal to one of the following combinations:

DS3 Port to DS3 Port Connections		DS1 Port to DS1 Port Connections
Twelve	and	None
Eleven	and	One Group of 28
Ten	and	Two Groups of 28 (56)
Nine	and	Three Groups of 28 (84)
Eight	and	Four Groups of 28 (112)
Seven	and	Five Groups of 28 (140)

Six	and	Six Groups of 28 (168)
Five	and	Seven Groups of 28 (196)
Four	and	Eight Groups of 28 (224)
Three	and	Nine Groups of 28 (252)
Two	and	Ten Groups of 28 (280)
One	and	Eleven Groups 28 (308)
None	and	Twelve Groups 28 (336)

An OC-12 Sub-ring or Arc sub-ring provided as part of OC-48 Dedicated Ring Service/2/ has a maximum capacity equal to one of the above combinations.

For OC-12 Dedicated Ring Service/2/ and OC-12 Sub-rings or Arc sub-ring as part of OC-48 Dedicated Ring Service/2/, individual DS1 port-to-DS1 port connection and DS3 port-to-port connection may be incrementally distributed between nodes on the ring in any manner.

For OC-12 Dedicated Ring Service/2/ using OC-12 Direct Drop Nodes/1/, the maximum ring capacity will be up to 84 DS1 port-to-port connections, together with up to 9 DS3 port-to-port connections, or equivalent. Individual DS1 port-to-port connections up to a total of 84 may be incrementally distributed between OC-12 Direct Drop Nodes on the ring in any manner.

/1/ Effective 04/08/06, the Direct Drop Node feature will no longer be available to new customers. There will be no change to existing customers.

/2/ Effective on August 21, 2018, AT&T will no longer offer term plans longer than 36 months, including any renewals, extensions or conversions of existing term commitments.

/3/ Effective on or after December 1, 2021, neither new nor existing customers will be permitted to purchase new OC3, OC12, OC48 and OC192 Dedicated Ring Service (Service). In addition, (A) Service Payment Plans greater than 12-months in length will no longer be available; and (B) requests to move, add, change, upgrade, or downgrade existing Service arrangements will not be accepted, with the following exceptions: (1) existing customers will be permitted to modify their existing Service and will be able to add new circuits to their existing Service, but will not be permitted to add new nodes in any locations; and (2) any such new circuits will be subject to the customer's existing term payment plan or term agreement for the Service to which they are added. Following the expiration of a customer's existing term agreement, Service will be provided on a month-to-month basis at the applicable Monthly rates until the Service is discontinued. Effective November 30, 2023, unless specified to the contrary in their existing Service agreements, existing customers may not renew Term Payment Plans or term agreements for Service. In addition, no move, add, or change orders of any type will be accepted. (N) (N)

7. Special Access Service (Cont'd)

7.2 Service Descriptions (Cont'd)

7.2.11 OC-3, OC-12, OC-48 and OC-192 Dedicated Ring/2/ (Cont'd) (C)

(B) Dedicated Ring Configuration (Cont'd)

(7) Dedicated Ring Connection Capacity (Cont'd)

OC-12 Dedicated Ring Service/1/ will also provide capability for node-to-node connection of STS-1 or STS-3C channels using OC-3 or OC-3c ports on the OC-12 ring. Each STS-1 to STS-1 channel connection or STS-1 channel to DS3 port connection requested by the customer will reduce the remaining ring capacity by the equivalent of one DS3 port-to-DS3 port connection or 28 DS1 port-to-DS1 port connections. Each STS-3C to STS-3C channel connection requested by the customer will reduce the remaining ring capacity by the equivalent of three DS3 port-to-DS3 port connections or 84 DS1 port-to-DS1 port connections.

An OC-3 Sub-ring provided as part of an OC-12 Dedicated Ring Service/1/ reduces the remaining OC-12 ring capacity by the equivalent of three DS3 port-to-DS3 port connections or 84 DS1 port-to-DS1 port connections.

/1/ Effective on August 21, 2018, AT&T will no longer offer term plans longer than 36 months, including any renewals, extensions or conversions of existing term commitments.

/2/ Effective on or after December 1, 2021, neither new nor existing customers will be permitted to purchase new OC3, OC12, OC48 and OC192 Dedicated Ring Service (Service). In addition, (A) Service Payment Plans greater than 12-months in length will no longer be available; and (B) requests to move, add, change, upgrade, or downgrade existing Service arrangements will not be accepted, with the following exceptions: (1) existing customers will be permitted to modify their existing Service and will be able to add new circuits to their existing Service, but will not be permitted to add new nodes in any locations; and (2) any such new circuits will be subject to the customer's existing term payment plan or term agreement for the Service to which they are added. Following the expiration of a customer's existing term agreement, Service will be provided on a month-to-month basis at the applicable Monthly rates until the Service is discontinued. (N)
Effective November 30, 2023, unless specified to the contrary in their existing Service agreements, existing customers may not renew Term Payment Plans or term agreements for Service. In addition, no move, add, or change orders of any type will be accepted. (N)

ACCESS SERVICE

7. Special Access Service (Cont'd)

7.2 Service Descriptions (Cont'd)

7.2.11 OC-3, OC-12, OC-48, and OC-192 Dedicated Ring/2/ (Cont'd) (C)

(B) Dedicated Ring Configuration (Cont'd)

(7) Dedicated Ring Connection Capacity (Cont'd)

For OC-48 Dedicated Ring Service/1/, the maximum ring capacity will be equal to one of the following combinations:

DS3 Port-to-DS3 Port Connections		DS1 Port-to-DS1 Port Connections
Forty-eight	and	None
Forty-seven	and	One Group of 28
Forty-six	and	Two Groups of 28 (56)
Forty-five	and	Three Groups of 28 (84)
Forty-four	and	Four Groups of 28 (112)
Forty-three	and	Five Groups of 28 (140)
Forty-two	and	Six Groups of 28 (168)

DS3 Port-to-DS3 Port Connections		DS1 Port-to-DS1 Por Connections
Forty-one	and	Seven Groups of 28 (196)
Forty	and	Eight Groups of 28 (224)
Thirty-nine	and	Nine Groups of 28 (252)
Thirty-eight	and	Ten Groups of 28 (280)
Thirty-seven	and	Eleven Groups of 28 (308)
Thirty-six	and	Twelve Groups of 28 (336)
Continuing down the scale to: None	and	Forty-eight Groups of 28 (1344)

/1/ Effective on August 21, 2018, AT&T will no longer offer term plans longer than 36 months, including any renewals, extensions or conversions of existing term commitments.

/2/ Effective on or after December 1, 2021, neither new nor existing customers will be permitted to purchase new OC3, OC12, OC48 and OC192 Dedicated Ring Service (Service). In addition, (A) Service Payment Plans greater than 12-months in length will no longer be available; and (B) requests to move, add, change, upgrade, or downgrade existing Service arrangements will not be accepted, with the following exceptions: (1) existing customers will be permitted to modify their existing Service and will be able to add new circuits to their existing Service, but will not be permitted to add new nodes in any locations; and (2) any such new circuits will be subject to the customer's existing term payment plan or term agreement for the Service to which they are added. Following the expiration of a customer's existing term agreement, Service will be provided on a month-to-month basis at the applicable Monthly rates until the Service is discontinued. (N)
Effective November 30, 2023, unless specified to the contrary in their existing Service agreements, existing customers may not renew Term Payment Plans or term agreements for Service. In addition, no move, add, or change orders of any type will be accepted. (N)

ACCESS SERVICE

7. Special Access Service (Cont'd)

7.2 Service Descriptions (Cont'd)

7.2.11 OC-3, OC-12, OC-48 and OC-192 Dedicated Ring/2/ (Cont'd) (C)

(B) Dedicated Ring Configuration (Cont'd)

(7) Dedicated Ring Connection Capacity (Cont'd)

For OC-48 Dedicated Ring Service/1/, individual DS1 port-to-DS1 port connection capacities may be distributed only in incremental groups of 28 between any two nodes on the ring. Individual DS3 port-to-DS3 port connection capacities may be incrementally distributed between nodes on the ring in any manner.

OC-48 Dedicated Ring Service/1/ also provides capability for node-to-node connection of STS-1 or STS-3C channels using OC-3, OC-3c, OC-12, OC-12c, 100 Mbps Ethernet or 1 Gbps Ethernet ports on the OC-48 ring. Each STS-1 to STS-1 channel connection or STS-1 channel to DS3 port connection requested by the customer reduces the remaining ring capacity by the equivalent of one DS3 port-to-port connection or 28 DS1 port-to-port connections. Each STS-3C to STS-3C channel connection requested by the customer reduces the remaining ring capacity by the equivalent of three DS3 port-to-DS3 port connections or 84 DS1 port-to-port connections.

An OC-3 Sub-ring provided as part of OC-48 Dedicated Ring Service/1/ reduces the remaining OC-48 ring capacity by the equivalent of three DS3 port-to-DS3 port connections or 84 DS1 port-to-DS1 port connections.

OC-48 Dedicated Ring Service/1/ also provides capability for node-to-node connections of STS-12C channels using OC-12 or OC-12c ports on the OC-48 ring. Each STS-12C to STS-12C channel connection requested by the customer reduces the remaining ring capacity by the equivalent of twelve DS3 port-to-DS3 port connections or 336 DS1-to-DS1 port connections.

An OC-12 Sub-ring provided as part of OC-48 Dedicated Ring Service/1/ reduces the remaining OC-48 ring capacity by the equivalent of twelve DS3 port-to-DS3 port connections or 336 DS1 port-to-DS1 port connections.

/1/ Effective on August 21, 2018, AT&T will no longer offer term plans longer than 36 months, including any renewals, extensions or conversions of existing term commitments.

/2/ Effective on or after December 1, 2021, neither new nor existing customers will be permitted to purchase new OC3, OC12, OC48 and OC192 Dedicated Ring Service (Service). In addition, (A) Service Payment Plans greater than 12-months in length will no longer be available; and (B) requests to move, add, change, upgrade, or downgrade existing Service arrangements will not be accepted, with the following exceptions: (1) existing customers will be permitted to modify their existing Service and will be able to add new circuits to their existing Service, but will not be permitted to add new nodes in any locations; and (2) any such new circuits will be subject to the customer's existing term payment plan or term agreement for the Service to which they are added. Following the expiration of a customer's existing term agreement, Service will be provided on a month-to-month basis at the applicable Monthly rates until the Service is discontinued. Effective November 30, 2023, unless specified to the contrary in their existing Service agreements, existing customers may not renew Term Payment Plans or term agreements for Service. In addition, no move, add, or change orders of any type will be accepted. (N) (N)

7. Special Access Service (Cont'd)

7.2 Service Descriptions (Cont'd)

7.2.11 OC-3, OC-12, OC-48 and OC-192 Dedicated Ring/2/(Cont'd)

(B) Dedicated Ring Configuration (Cont'd) (C)

(7) Dedicated Ring Connection Capacity (Cont'd)

For OC-192 Dedicated Ring Service/1/, the maximum ring capacity between nodes is not to exceed 96 STS-1 equivalents.

OC-192 Dedicated Ring Service/1/ will provide capability for node-to-node connection of STS-1 or STS-3C channels using OC-3, OC-3c, OC-12, OC-12c, OC-48, OC-48c, 100 Mbps Ethernet or 1 Gbps Ethernet ports on the OC-192 ring.

OC-192 Dedicated Ring Service/1/ will also provide capability for node-to-node connections of STS-12C channels using OC-12, OC-12c, OC-48, OC-48c or 1 Gbps Ethernet ports on the OC-192 ring.

OC-192 Dedicated Ring Service/1/ will also provide capability for node-to-node connections of STS-48C channels using OC-48 or OC-48c ports on the OC-192 ring.

Virtual Concatenation (VCAT) provides the ability and flexibility to size the customer's bandwidth, sub-rate VT1.5 and super-rate STS-1 and 3c service payloads, based on their traffic requirements. For transport of payloads that do not fit efficiently into the standard set of VT1.5, STS-1 and STS-Nc payload envelopes, virtual concatenation can be used.

The maximum transport capacity of an OC-3, OC-12 or OC-48 sub-ring or Arc sub-ring is characterized by the total quantity of individual port connections allowed between all nodes on the ring. Refer to DSRS Section 7.2.11(B) (7) for combinations.

Unprotected services may be interrupted to repair other circuits. In cases where the customer orders OC-192 Dedicated Ring Service/1/ with an unprotected 2-fiber service interface, the Telephone Company may provision this unprotected service, with other unprotected services, via a multi-port circuit card. If one unprotected service on the card incurs an outage, the Telephone Company may repair the 2-fiber service interface device by replacing the card, which may temporarily interrupt service on any other unprotected tributary circuits that subtend this same multi-port circuit card. In the event of a service interruption, credit allowance will be provided for the service that suffered the unplanned outage, as outlined in Section 7.2.11(A)(1), previously.

/1/ Effective on August 21, 2018, AT&T will no longer offer term plans longer than 36 months, including any renewals, extensions or conversions of existing term commitments.

/2/ Effective on or after December 1, 2021, neither new nor existing customers will be permitted to purchase new OC3, OC12, OC48 and OC192 Dedicated Ring Service (Service). In addition, (A) Service Payment Plans greater than 12-months in length will no longer be available; and (B) requests to move, add, change, upgrade, or downgrade existing Service arrangements will not be accepted, with the following exceptions: (1) existing customers will be permitted to modify their existing Service and will be able to add new circuits to their existing Service, but will not be permitted to add new nodes in any locations; and (2) any such new circuits will be subject to the customer's existing term payment plan or term agreement for the Service to which they are added. Following the expiration of a customer's existing term agreement, Service will be provided on a month-to-month basis at the applicable Monthly rates until the Service is discontinued. Effective November 30, 2023, unless specified to the contrary in their existing Service agreements, existing customers may not renew Term Payment Plans or term agreements for Service. In addition, no move, add, or change orders of any type will be accepted. (N) (N)

ACCESS SERVICE

7. Special Access Service (Cont'd)
7.2 Service Descriptions (Cont'd)
7.2.11 OC-3, OC-12, OC-48 and OC-192 Dedicated Ring/1/ (Cont'd) (C)
(B) Dedicated Ring Configuration (Cont'd)
(8) Diagram OC-3, OC-12 and OC-48 Ring
OC-3 Dedicated Ring Service

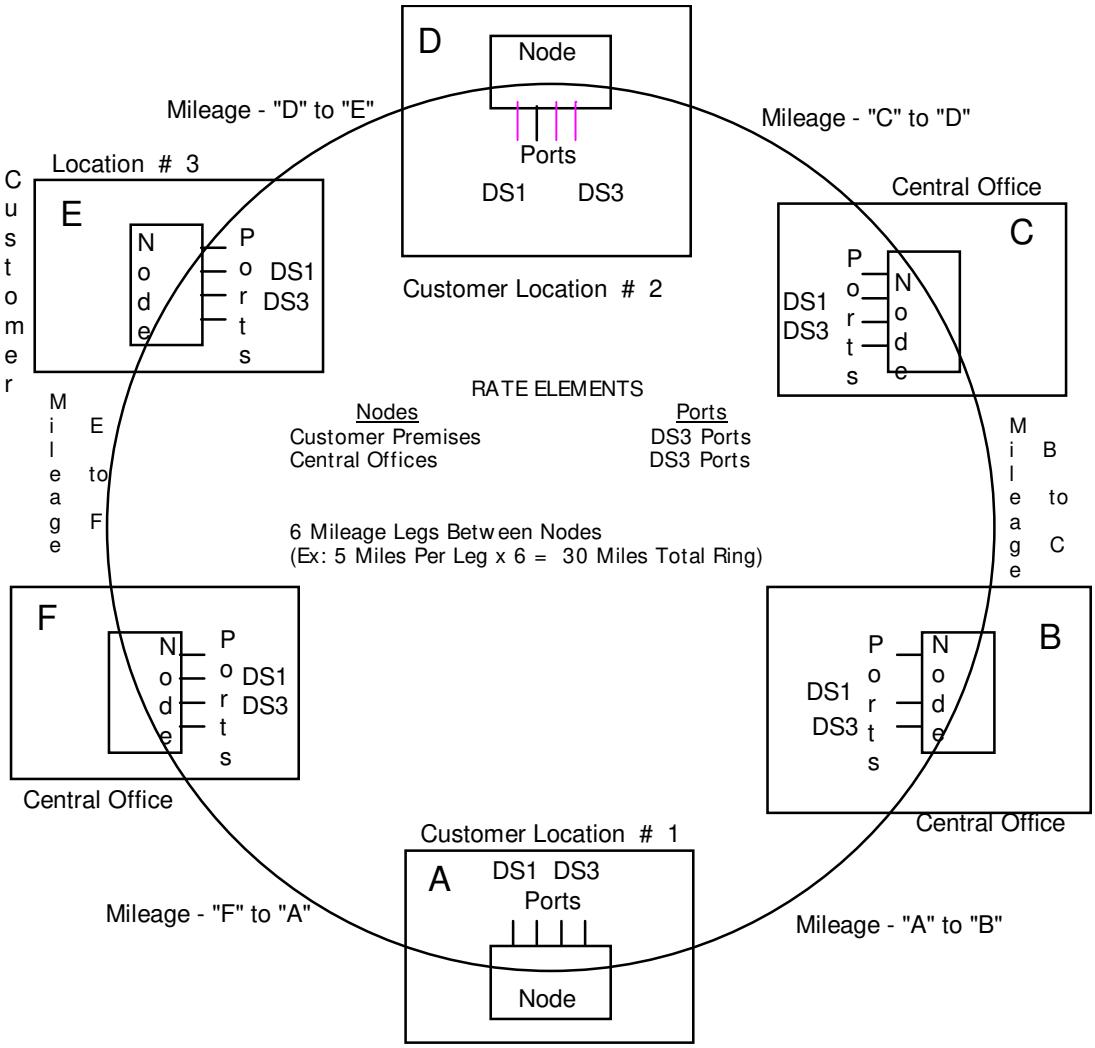

/1/ Effective on or after December 1, 2021, neither new nor existing customers will be permitted to purchase new OC3, OC12, OC48 and OC192 Dedicated Ring Service (Service). In addition, (A) Service Payment Plans greater than 12-months in length will no longer be available; and (B) requests to move, add, change, upgrade, or downgrade existing Service arrangements will not be accepted, with the following exceptions: (1) existing customers will be permitted to modify their existing Service and will be able to add new circuits to their existing Service, but will not be permitted to add new nodes in any locations; and (2) any such new circuits will be subject to the customer's existing term payment plan or term agreement for the Service to which they are added. Following the expiration of a customer's existing term agreement, Service will be provided on a month-to-month basis at the applicable Monthly rates until the Service is discontinued. (N)
Effective November 30, 2023, unless specified to the contrary in their existing Service agreements, existing customers may not renew Term Payment Plans or term agreements for Service. In addition, no move, add, or change orders of any type will be accepted. (N)

ACCESS SERVICE

7. Special Access Service (Cont'd)
7.2 Service Descriptions (Cont'd)
7.2.11 OC-3, OC-12, OC-48 and OC-192 Dedicated Ring/1/ (Cont'd) (C)
(B) Dedicated Ring Configuration (Cont'd)
(8) Diagram OC-3, OC-12 and OC-48 Ring (Cont'd)
OC-12 Dedicated Ring Service

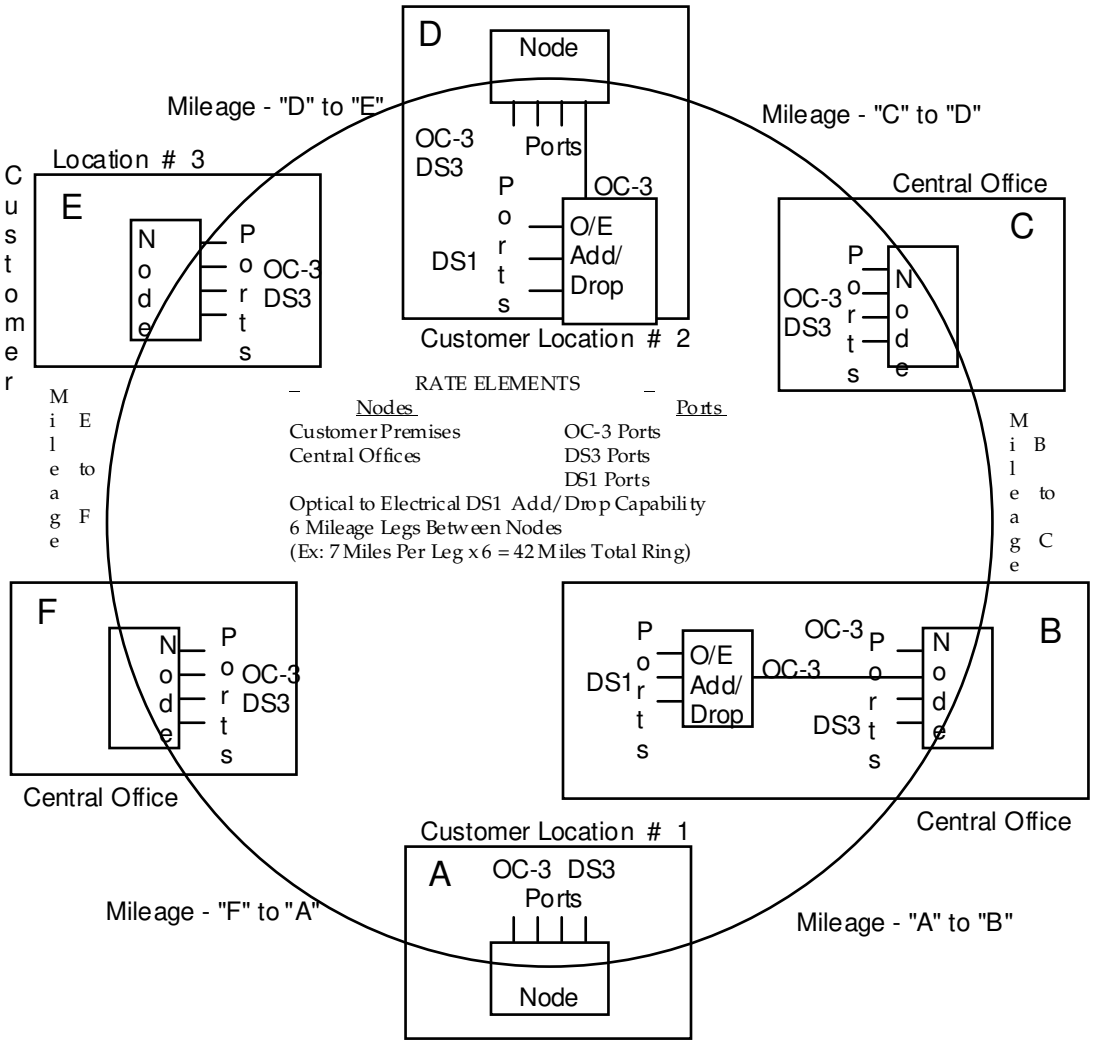

/1/ Effective on or after December 1, 2021, neither new nor existing customers will be permitted to purchase new OC3, OC12, OC48 and OC192 Dedicated Ring Service (Service). In addition, (A) Service Payment Plans greater than 12-months in length will no longer be available; and (B) requests to move, add, change, upgrade, or downgrade existing Service arrangements will not be accepted, with the following exceptions: (1) existing customers will be permitted to modify their existing Service and will be able to add new circuits to their existing Service, but will not be permitted to add new nodes in any locations; and (2) any such new circuits will be subject to the customer's existing term payment plan or term agreement for the Service to which they are added. Following the expiration of a customer's existing term agreement, Service will be provided on a month-to-month basis at the applicable Monthly rates until the Service is discontinued. (N)
Effective November 30, 2023, unless specified to the contrary in their existing Service agreements, existing customers may not renew Term Payment Plans or term agreements for Service. In addition, no move, add, or change orders of any type will be accepted. (N)

ACCESS SERVICE

7. Special Access Service (Cont'd)
7.2 Service Descriptions (Cont'd)
7.2.11 OC-3, OC-12, OC-48 and OC-192 Dedicated Ring/1/ (Cont'd) (C)
(B) Dedicated Ring Configuration (Cont'd)
(8) Diagram OC-3, OC12 and OC-48 Ring (Cont'd)
OC-48 Dedicated Ring Service

Error! Objects cannot be created from editing field codes.

/1/ Effective on or after December 1, 2021, neither new nor existing customers will be permitted to purchase new OC3, OC12, OC48 and OC192 Dedicated Ring Service (Service). In addition, (A) Service Payment Plans greater than 12-months in length will no longer be available; and (B) requests to move, add, change, upgrade, or downgrade existing Service arrangements will not be accepted, with the following exceptions: (1) existing customers will be permitted to modify their existing Service and will be able to add new circuits to their existing Service, but will not be permitted to add new nodes in any locations; and (2) any such new circuits will be subject to the customer's existing term payment plan or term agreement for the Service to which they are added. Following the expiration of a customer's existing term agreement, Service will be provided on a month-to-month basis at the applicable Monthly rates until the Service is discontinued. (N)
Effective November 30, 2023, unless specified to the contrary in their existing Service agreements, existing customers may not renew Term Payment Plans or term agreements for Service. In addition, no move, add, or change orders of any type will be accepted. (N)

ACCESS SERVICE

7. Special Access Service (Cont'd)

7.2 Service Descriptions (Cont'd)

7.2.11 OC-3, OC-12, OC-48 and OC-192 Dedicated Ring/1/ (Cont'd) (C)

(B) Dedicated Ring Configuration (Cont'd)

(8) Diagram OC-3, OC-12 and OC-48 Ring (Cont'd)

Ameritech Sub-Ring Nodes

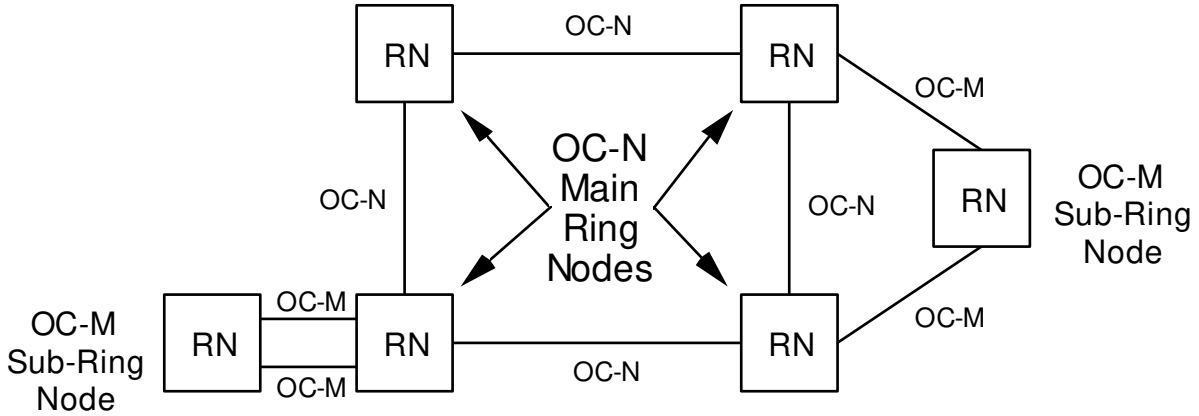

Ameritech Sub-Ring Nodes, OC-M < OC-N

/1/ Effective on or after December 1, 2021, neither new nor existing customers will be permitted to purchase new OC3, OC12, OC48 and OC192 Dedicated Ring Service (Service). In addition, (A) Service Payment Plans greater than 12-months in length will no longer be available; and (B) requests to move, add, change, upgrade, or downgrade existing Service arrangements will not be accepted, with the following exceptions: (1) existing customers will be permitted to modify their existing Service and will be able to add new circuits to their existing Service, but will not be permitted to add new nodes in any locations; and (2) any such new circuits will be subject to the customer's existing term payment plan or term agreement for the Service to which they are added. Following the expiration of a customer's existing term agreement, Service will be provided on a month-to-month basis at the applicable Monthly rates until the Service is discontinued. (N)
Effective November 30, 2023, unless specified to the contrary in their existing Service agreements, existing customers may not renew Term Payment Plans or term agreements for Service. In addition, no move, add, or change orders of any type will be accepted. (N)

ACCESS SERVICE

7. Special Access Service (Cont'd)

7.2 Service Descriptions (Cont'd)

7.2.11 OC-3, OC-12, OC-48 and OC-192 Dedicated Ring[/1/] (Cont'd) (C)

(B) Dedicated Ring Configuration (Cont'd)

(8) Diagram OC-3, OC-12 and OC-48 Ring (Cont'd)

ARC Sub-Ring Nodes, OC-*m* < OC-*n*

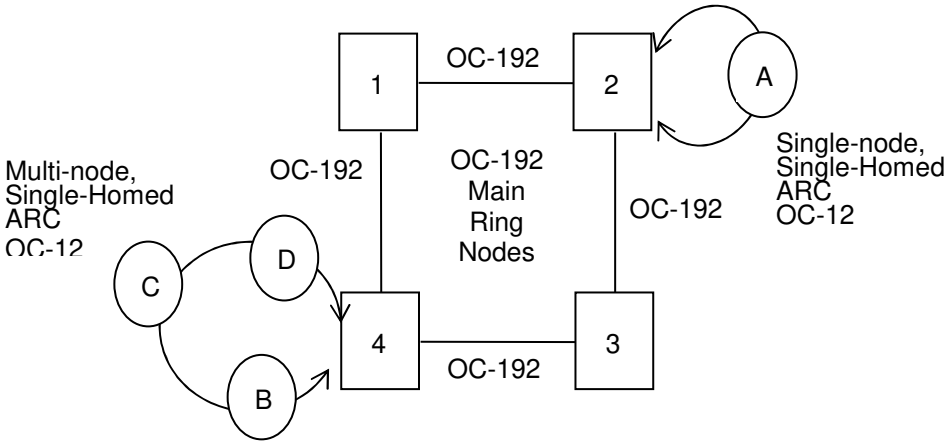

ARC Sub-Ring Nodes, OC-M < OC-N

OC-192 Dedicated Ring shown as example.

/1/ Effective on or after December 1, 2021, neither new nor existing customers will be permitted to purchase new OC3, OC12, OC48 and OC192 Dedicated Ring Service (Service). In addition, (A) Service Payment Plans greater than 12-months in length will no longer be available; and (B) requests to move, add, change, upgrade, or downgrade existing Service arrangements will not be accepted, with the following exceptions: (1) existing customers will be permitted to modify their existing Service and will be able to add new circuits to their existing Service, but will not be permitted to add new nodes in any locations; and (2) any such new circuits will be subject to the customer's existing term payment plan or term agreement for the Service to which they are added. Following the expiration of a customer's existing term agreement, Service will be provided on a month-to-month basis at the applicable Monthly rates until the Service is discontinued. (N)
Effective November 30, 2023, unless specified to the contrary in their existing Service agreements, existing customers may not renew Term Payment Plans or term agreements for Service. In addition, no move, add, or change orders of any type will be accepted. (N)

7. Special Access Service (Cont'd)

7.2 Service Descriptions (Cont'd)

7.2.11 OC-3, OC-12, OC-48 and OC-192 Dedicated Ring/3/ (Cont'd) (C)

(B) Dedicated Ring Configuration (Cont'd)

(9) Dedicated Ring Configuration/1/

Dedicated Rings/2/ are available for either 36 month or 60 month/2/ periods. Monthly recurring charges apply for the nodes, ports and mileage between nodes. If a node is added after the initial installation of the dedicated ring, the new node will carry the same OPP rate as the initial ring and be co-terminus with that OPP. However, if a node is added during the last 12 months or less of an OPP, the customer will be billed the initial OPP ring rate for a minimum period of 12 months. Once an OPP term has expired, the customer's service will convert to the Monthly Extension rate until the customer cancels or renews the service with a new OPP/2/ term. To renew the service, the customer must provide The Company with a written notice of intent to renew the OPP no later than 60 days prior to its expiration. Monthly Extension Rates are not available to new subscriptions. The OPP prepayment option is not available with this service.

Effective October 2, 2003, new orders for Dedicated Ring Service/2/ with the EoS enhancement will be served by different equipment than the equipment used for customers who placed Dedicated Ring Service/2/ orders that were completed prior to October 2, 2003. Customers subscribing to Dedicated Ring Service/2/ prior to October 2, 2003. Customers subscribing to Dedicated Ring Service/2/ prior to October 2, 2003 requesting to be changed to the new equipment will incur termination liability charges for their existing service. Disconnect of the existing Dedicated Ring Service/2/ and placement of an order for new Dedicated Ring Service/2/ with the EoS enhancement is required. The monthly rates for the new service(s) shall be those rates in effect at the time the new service(s) are installed.

For service purchased prior to October 13, 2000, Termination Liability charges will apply for the Node only as described below by paying a percentage of the monthly charges for the remainder of the term as indicated below:

OPP Terms in Months	Termination Percentage
36	75
60/2/	60

/1/ For term pricing plans effective on or after November 25, 2019, see terms in Section 7.2.10(F)(1) of this guidebook.

/2/ Effective on August 21, 2018, AT&T will no longer offer term plans longer than 36 months, including any renewals, extensions or conversions of existing term commitments.

/3/ Effective on or after December 1, 2021, neither new nor existing customers will be permitted to purchase new OC3, OC12, OC48 and OC192 Dedicated Ring Service (Service). In addition, (A) Service Payment Plans greater than 12-months in length will no longer be available; and (B) requests to move, add, change, upgrade, or downgrade existing Service arrangements will not be accepted, with the following exceptions: (1) existing customers will be permitted to modify their existing Service and will be able to add new circuits to their existing Service, but will not be permitted to add new nodes in any locations; and (2) any such new circuits will be subject to the customer's existing term payment plan or term agreement for the Service to which they are added. Following the expiration of a customer's existing term agreement, Service will be provided on a month-to-month basis at the applicable Monthly rates until the Service is discontinued. (N)
Effective November 30, 2023, unless specified to the contrary in their existing Service agreements, existing customers may not renew Term Payment Plans or term agreements for Service. In addition, no move, add, or change orders of any type will be accepted. (N)

ACCESS SERVICE

7. Special Access Service (Cont'd)

7.2 Service Descriptions (Cont'd)

7.2.11 OC-3, OC-12, OC-48 and OC-192 Dedicated Ring/1/ (Cont'd) (C)

(B) Dedicated Ring Configuration (Cont'd)

(9) Dedicated Ring Configuration (Cont'd)

If a customer cancels a service order or terminates services before the completion of the term for any reason whatsoever other than a service interruption, the customer agrees to pay to the Telephone Company termination liability charges, which are defined below. These charges shall become due and owing as of the effective date of the cancellation or termination and are payable within 30 days of the invoice date, subject to interest penalty on the unpaid balance.

Customer's termination liability for cancellation of service shall be equal to:

A) All waived and/or unpaid nonrecurring charges, plus;

B) 50% of all recurring charges for the balance of the customer's term.

Logical changes in the ring (change in mapping content) are not considered to be a dedicated ring termination, however, any physical change would be considered a termination and all appropriate termination liability would apply.

/1/ Effective on or after December 1, 2021, neither new nor existing customers will be permitted to purchase new OC3, OC12, OC48 and OC192 Dedicated Ring Service (Service). In addition, (A) Service Payment Plans greater than 12-months in length will no longer be available; and (B) requests to move, add, change, upgrade, or downgrade existing Service arrangements will not be accepted, with the following exceptions: (1) existing customers will be permitted to modify their existing Service and will be able to add new circuits to their existing Service, but will not be permitted to add new nodes in any locations; and (2) any such new circuits will be subject to the customer's existing term payment plan or term agreement for the Service to which they are added. Following the expiration of a customer's existing term agreement, Service will be provided on a month-to-month basis at the applicable Monthly rates until the Service is discontinued. (N)
Effective November 30, 2023, unless specified to the contrary in their existing Service agreements, existing customers may not renew Term Payment Plans or term agreements for Service. In addition, no move, add, or change orders of any type will be accepted. (N)

7. Special Access Service (Cont'd)

7.2 Service Descriptions (Cont'd)

7.2.11 OC-3, OC-12, OC-48 and OC-192 Dedicated Ring[/3/] (Cont'd) (C)

(B) Dedicated Ring Configuration (Cont'd)

(10) Shared Network Arrangement [/1/]

A Shared Network Arrangement is a service offering that enables a customer ("Service User") to connect subtending services to an OC-3, OC-12, OC-48 or OC-192 Dedicated Ring service[/2/] of another customer (the "Host Subscriber"), with the Telephone Company maintaining separate billing for each. Each customer will be billed for those rate elements associated with their own portion of the service configuration. The Host Subscriber will be responsible for all Dedicated Ring Service rate elements, for example, node, ports and mileage, etc. Under no circumstances will the rates or charges for individual rate elements be split. This offering is limited to service configurations where a Service User orders a subtending service dropped from a Host subscriber's Dedicated Ring[/2/] wire center node.

Under the Shared Network Arrangement, the Telephone Company may share record information with the Host Subscriber pertaining to the services of other users of the shared network. Such disclosure will be under the sole discretion of the Telephone Company and is necessary to perform billing reconciliation and/or other functions required in connection with maintaining account records.

Section 7.4.12 contains rate regulations specific to Shared Network Arrangements.

/1/ Effective 06/01/06, this regulation is limited to existing customers. For new customers purchasing Shared Network Arrangement, terms and conditions set forth in Section 5.2 (A), will apply.

/2/ Effective on August 21, 2018, AT&T will no longer offer term plans longer than 36 months, including any renewals, extensions or conversions of existing term commitments.

/3/ Effective on or after December 1, 2021, neither new nor existing customers will be permitted to purchase new OC3, OC12, OC48 and OC192 Dedicated Ring Service (Service). In addition, (A) Service Payment Plans greater than 12-months in length will no longer be available; and (B) requests to move, add, change, upgrade, or downgrade existing Service arrangements will not be accepted, with the following exceptions: (1) existing customers will be permitted to modify their existing Service and will be able to add new circuits to their existing Service, but will not be permitted to add new nodes in any locations; and (2) any such new circuits will be subject to the customer's existing term payment plan or term agreement for the Service to which they are added. Following the expiration of a customer's existing term agreement, Service will be provided on a month-to-month basis at the applicable Monthly rates until the Service is discontinued. (N)

Effective November 30, 2023, unless specified to the contrary in their existing Service agreements, existing customers may not renew Term Payment Plans or term agreements for Service. In addition, no move, add, or change orders of any type will be accepted. (N)

ACCESS SERVICE

7. Special Access Service (Cont'd)

7.2 Service Descriptions (Cont'd)

7.2.11 OC-3, OC-12, OC-48 and OC-192 Dedicated Ring[/3/] (Cont'd) (C)

(B) Dedicated Ring Configuration (Cont'd)

(11) Re-Map Service[/1/]

Re-Map Service is provided in conjunction with an Ameritech Dedicated Ring Service[/2/] and allows for a pre-defined set of services to be rerouted by Ameritech from one customer premises node to another customer premises node (defined as a "Re-Map node") in the event of a customer premises disaster. Re-Map Service will be tested at initial installation and once each year thereafter. Additional testing can be requested and will be charged on a per test basis. Activation upon customer request in the event of an emergency will be charged on a per occurrence basis.

Once the customer notifies Ameritech that they are ready to receive signals at the re-map node site Ameritech will re-map up to 50 circuits within the initial hours and 20 circuits every hour thereafter. The Emergency Activation Nonrecurring Charge will not be applied if the first 50 circuits are not remapped within 4 hours due to an Ameritech caused delay.

Re-Map testing or activation for OC-3 or OC-12 DDN service requires a minimum of one DS1 (VT1.5), or 1 DS3 (STS-1) between one customer premises node and the Re-Map node.

Re-Map testing or activation for OC-12 or OC-48 service requires a minimum incremental group from 1 to 28 DS1s or one DS3 (equals one STS-1) between one customer premises node and the Re-Map node.

The emergency Re-Map activation configuration will be maintained for up to 30 days. After 30 days, if the customer wishes to maintain the emergency configuration, the emergency activation NRC will be applied once for each 30 day additional period.

Re-Map Service is available on Self-Healing Uni-Directional Path Switched Rings (UPSR) only.

(12) STS-1 Service

The STS-1 circuit allows the efficient transport of up to 51.84 Mbps of bandwidth across Dedicated SONET Ring utilizing EC-1 (Electrical Connection – Level 1) ports on the dedicated service. While the EC-1 port is comparable to the DS-3 port as far as the connection capacity per STS, the STS-1 circuit utilizes the entire bandwidth of the STS (51.84 Mbps) while the DS-3 uses 44.76 Mbps of the STS. The STS-1 circuit is available via EC-1 ports on OC-3, OC-12, OC-48 and OC-192 rings[/2/].

/1/ Effective August 10, 2013, availability of Re-Map nodes is limited to Re-Map nodes that are in service or have been ordered prior to August 10, 2013.

/2/ Effective on August 21, 2018, AT&T will no longer offer term plans longer than 36 months, including any renewals, extensions or conversions of existing term commitments.

/3/ Effective on or after December 1, 2021, neither new nor existing customers will be permitted to purchase new OC3, OC12, OC48 and OC192 Dedicated Ring Service (Service). In addition, (A) Service Payment Plans greater than 12-months in length will no longer be available; and (B) requests to move, add, change, upgrade, or downgrade existing Service arrangements will not be accepted, with the following exceptions: (1) existing customers will be permitted to modify their existing Service and will be able to add new circuits to their existing Service, but will not be permitted to add new nodes in any locations; and (2) any such new circuits will be subject to the customer's existing term payment plan or term agreement for the Service to which they are added. Following the expiration of a customer's existing term agreement, Service will be provided on a month-to-month basis at the applicable Monthly rates until the Service is discontinued. (N)

Effective November 30, 2023, unless specified to the contrary in their existing Service agreements, existing customers may not renew Term Payment Plans or term agreements for Service. In addition, no move, add, or change orders of any type will be accepted. (N)

ACCESS SERVICE

7. Special Access Service (Cont'd)

7.2 Service Descriptions (Cont'd)

7.2.11 OC-3, OC-12, OC-48 and OC-192 Dedicated Ring/3/ (Cont'd) (C)

(B) Dedicated Ring Configuration (Cont'd)

(13) Unprotected Channel Transport (UCT)

UCT will allow customers to transport traffic (DS-1, DS-3, up to OC-48), over a ring without enabling SONET protection schemes. This is intended for applications in which the customer provides protection for the circuit through means other than those available through SONET. If a fault occurs on the ring along the transport path, the traffic will not be switched to a protection channel. Service will be interrupted on that circuit until the fault is corrected. The customer is required to call in and open a trouble ticket for the unprotected service. If a fault occurs in the ring, but does not occur along the transport route, service will not be interrupted on that circuit.

Customers who order Dedicated SONET Ring Service/2/ may need to replace or upgrade their existing service to invoke use of UCT for circuit assignments. Use of UCT is managed through a Special Routing Code (SRC) in relation to a circuit's Connecting Facility Assignment (CFA). When an Unprotected service is placed on a channel, the protection switching is shut off. When a UCT is disconnected, the channel will revert back to the standard protection mode.

/1/ Material now appears on Original Sheet 274.7.1.1.

/2/ Effective on August 21, 2018, AT&T will no longer offer term plans longer than 36 months, including any renewals, extensions or conversions of existing term commitments.

/3/ Effective on or after December 1, 2021, neither new nor existing customers will be permitted to purchase new OC3, OC12, OC48 and OC192 Dedicated Ring Service (Service). In addition, (A) Service Payment Plans greater than 12-months in length will no longer be available; and (B) requests to move, add, change, upgrade, or downgrade existing Service arrangements will not be accepted, with the following exceptions: (1) existing customers will be permitted to modify their existing Service and will be able to add new circuits to their existing Service, but will not be permitted to add new nodes in any locations; and (2) any such new circuits will be subject to the customer's existing term payment plan or term agreement for the Service to which they are added. Following the expiration of a customer's existing term agreement, Service will be provided on a month-to-month basis at the applicable Monthly rates until the Service is discontinued. (N)
Effective November 30, 2023, unless specified to the contrary in their existing Service agreements, existing customers may not renew Term Payment Plans or term agreements for Service. In addition, no move, add, or change orders of any type will be accepted. (N)

ACCESS SERVICE

7. Special Access Service (Cont'd)

7.2 Service Descriptions (Cont'd)

7.2.11 OC-3, OC-12, OC-48 and OC-192 Dedicated Ring/4/ (Cont'd) (C)

(B) Dedicated Ring Configuration (Cont'd)

(14) Upgrade to OC-192 Ring Service from lower speed services

Customers with three or five year/3/ OPPs may at any time upgrade from OC-48 to OC-192 Dedicated SONET Ring/3/ service without incurring the Termination Liability charge, providing the following criteria are met:

- The customer subscribes to a Term Pricing Plan period that is equal to, or greater than 36 months/3/;
- The expiration date for the new Term Pricing Plan/3/ period is beyond the end of the original Optional Payment Plan period;
- No lapse in service occurs;
- Nonrecurring Charges will apply;
- The monthly rates for the new service(s) will be those rates in effect at the time the new service(s) is/are installed;
- The new service is provided between the same customer locations and with the same customer of record as the disconnected service;
- The original location of all nodes must be included in the new service;
- Billed recurring revenue for each month of the first eighteen months of the new service is equal to or greater than the billed recurring revenue for the last month of the service(s) being converted;
- Customer agrees not to convert the new service term pricing plan/3/ to a pricing plan with a lower rate for the period of eighteen months after the conversion;
- Spare facilities and equipment must be available or a nonrecurring upfront payment, which is a Special Construction Charge, will apply; and
- Existing service must have been in place for a minimum of 12 months./1/

/1/ This criteria does not apply to term plans purchased prior to 04/08/06.

/2/ Material previously appeared on 5th Revised Sheet 274.7.1

/3/ Effective on August 21, 2018, AT&T will no longer offer term plans longer than 36 months, including any renewals, extensions or conversions of existing term commitments.

/4/ Effective on or after December 1, 2021, neither new nor existing customers will be permitted to purchase new OC3, OC12, OC48 and OC192 Dedicated Ring Service (Service). In addition, (A) Service Payment Plans greater than 12-months in length will no longer be available; and (B) requests to move, add, change, upgrade, or downgrade existing Service arrangements will not be accepted, with the following exceptions: (1) existing customers will be permitted to modify their existing Service and will be able to add new circuits to their existing Service, but will not be permitted to add new nodes in any locations; and (2) any such new circuits will be subject to the customer's existing term payment plan or term agreement for the Service to which they are added. Following the expiration of a customer's existing term agreement, Service will be provided on a month-to-month basis at the applicable Monthly rates until the Service is discontinued. (N)
Effective November 30, 2023, unless specified to the contrary in their existing Service agreements, existing customers may not renew Term Payment Plans or term agreements for Service. In addition, no move, add, or change orders of any type will be accepted. (N)

ACCESS SERVICE

7. Special Access Service (Cont'd)

7.2 Service Descriptions (Cont'd)

7.2.11 OC-3, OC-12, OC-48 and OC-192 Dedicated Ring[/1/] (Cont'd) (C)

(B) Dedicated Ring Configuration (Cont'd)

(15)* Upgrade to Next Generation SONET equipment (required for Ethernet ports)

Customers with three or five-year OPPs may at any time upgrade to Next Generation equipment without incurring Termination Liability charge, providing the following criteria are met:

- The customer subscribes to a Term Plan period that is equal to, or greater than thirty-six months;
- The expiration date for the new Term Plan period is beyond the end of the original Optional Payment Plan period;
- No lapse in service occurs;
- Nonrecurring charges will apply, when applicable;
- The monthly rates for the new service(s) will be those rates in effect at the time the new service(s) is/are installed;
- The new service is provided between the same customer locations and with the same customer of record as the disconnected service;
- The original location of all nodes must be included in the new service.
- Billed recurring revenue for each month of the first eighteen months of the new service is equal to or greater than the billed recurring revenue for the last month of the service(s) being converted.

* This option is limited to existing customers at existing locations purchased between September 5, 2003 and May 4, 2004.

/1/ Effective on or after December 1, 2021, neither new nor existing customers will be permitted to purchase new OC3, OC12, OC48 and OC192 Dedicated Ring Service (Service). In addition, (A) Service Payment Plans greater than 12-months in length will no longer be available; and (B) requests to move, add, change, upgrade, or downgrade existing Service arrangements will not be accepted, with the following exceptions: (1) existing customers will be permitted to modify their existing Service and will be able to add new circuits to their existing Service, but will not be permitted to add new nodes in any locations; and (2) any such new circuits will be subject to the customer's existing term payment plan or term agreement for the Service to which they are added. Following the expiration of a customer's existing term agreement, Service will be provided on a month-to-month basis at the applicable Monthly rates until the Service is discontinued. (N)
Effective November 30, 2023, unless specified to the contrary in their existing Service agreements, existing customers may not renew Term Payment Plans or term agreements for Service. In addition, no move, add, or change orders of any type will be accepted. (N)

7. Special Access Service (Cont'd)

7.2 Service Descriptions (Cont'd)

7.2.11 OC-3, OC-12, OC-48 and OC-192 Dedicated Ring[/2/] (Cont'd) (C)

(B) Dedicated Ring Configuration (Cont'd)

(16) Upgrade to a higher speed Dedicated Ring with Next Generation SONET equipment (required for Ethernet ports)

Customers with three or five-year OPPs may at any time upgrade to a higher speed Dedicated Ring with Next Generation equipment without incurring Termination Liability charge, providing the following criteria are met:

- The customer subscribes to a Term Plan period that is equal to, or greater than thirty-six months;
- The expiration date for the new Term Plan period is beyond the end of the original Optional Payment Plan period;
- No lapse in service occurs;
- Nonrecurring charges will apply;
- The monthly rates for the new service(s) will be those rates in effect at the time the new service(s) is/are installed;
- The new service is provided between the same customer locations and with the same customer of record as the disconnected service;
- The original location of all nodes must be included in the new service;
- Billed recurring revenue for each month of the first eighteen months of the new service is equal to or greater than the billed recurring revenue for the last month of the service(s) being converted; and
- Existing service must have been in place for a minimum of 12 months.[/1/]

/1/ This criteria does not apply to term plans purchased prior to 04/08/06.

/2/ Effective on or after December 1, 2021, neither new nor existing customers will be permitted to purchase new OC3, OC12, OC48 and OC192 Dedicated Ring Service (Service). In addition, (A) Service Payment Plans greater than 12-months in length will no longer be available; and (B) requests to move, add, change, upgrade, or downgrade existing Service arrangements will not be accepted, with the following exceptions: (1) existing customers will be permitted to modify their existing Service and will be able to add new circuits to their existing Service, but will not be permitted to add new nodes in any locations; and (2) any such new circuits will be subject to the customer's existing term payment plan or term agreement for the Service to which they are added. Following the expiration of a customer's existing term agreement, Service will be provided on a month-to-month basis at the applicable Monthly rates until the Service is discontinued. (N)
Effective November 30, 2023, unless specified to the contrary in their existing Service agreements, existing customers may not renew Term Payment Plans or term agreements for Service. In addition, no move, add, or change orders of any type will be accepted. (N)

7. Special Access Service (Cont'd)

7.2 Service Description (Cont'd)

7.2.11 OC-3, OC-12, OC-48 and OC-192 Dedicated Ring/2/ (Cont'd) (C)

(B) Dedicated Ring Configuration (Cont'd)

(17) Renewal Options(1)

Current OC-3, OC-12, OC-48, and OC-192 Dedicated Ring customers have the option to extend their 36 month or 60 month OPP Rates. Customers may extend their existing term as noted:

- 36 month terms may be extended for an additional 24 month renewal term commitment at 36 month rates
- 60 month terms may be extended for an additional 36 month renewal term commitment at 60 month rates

Customers must initiate a request for one of these Renewal options. After the first renewal term commitment is completed under these Renewal Options, rates will convert to monthly extension rates unless a 36 month or 60 month OPP is purchased.

Qualification for these Renewal Options include eligible services meeting either of the requirements below:

(1) Services that have expired and are currently on monthly extension rates.
(2) Services under Promotional Offering Tariff Ill. C.C. No. 21, 17.2(11).

Customers currently on monthly extension rates are not eligible for retroactive treatment under these Renewal Options.

Termination Liability charges as contained in Section 7.2.11 will apply.

/1/ For term pricing plans effective on or after November 25, 2019, see terms in Section 7.2.10(F)(1) of this guidebook.

/2/ Effective on or after December 1, 2021, neither new nor existing customers will be permitted to purchase new OC3, OC12, OC48 and OC192 Dedicated Ring Service (Service). In addition, (A) Service Payment Plans greater than 12-months in length will no longer be available; and (B) requests to move, add, change, upgrade, or downgrade existing Service arrangements will not be accepted, with the following exceptions: (1) existing customers will be permitted to modify their existing Service and will be able to add new circuits to their existing Service, but will not be permitted to add new nodes in any locations; and (2) any such new circuits will be subject to the customer's existing term payment plan or term agreement for the Service to which they are added. Following the expiration of a customer's existing term agreement, Service will be provided on a month-to-month basis at the applicable Monthly rates until the Service is discontinued. (N)
Effective November 30, 2023, unless specified to the contrary in their existing Service agreements, existing customers may not renew Term Payment Plans or term agreements for Service. In addition, no move, add, or change orders of any type will be accepted. (N)

7. Special Access Service (Cont'd)

7.2 Service Descriptions (Cont'd)

7.2.12 SONET Xpress Service/1/

A. Basic Service Description

SONET Xpress/1/ service is a shared ring service which provides high performance and reliability parameters with the level of survivability designed to limit a single event from interrupting service. It provides route, central office equipment, and signal payload protection for point-to-point DS1 and DS3 channels provisioned on the shared ring. No additional optional features are required for this level of protection. It provides flat rate transport across the network of DS1, DS3, OC-3 and OC-12 (VT1.5 and STS-1) channels. SONET Xpress/1/ utilizes SONET facilities and is available only in buildings and wire centers (SONET Xpress/1/ Network) where the Telephone Company has established shared rings.

For locations where SONET Xpress/1/ is not yet available Special Construction charges may apply. Expansion of service areas by means of Special Construction will only be allowed in designated areas consistent with the Telephone Company's construction program. The construction program is anticipated to include Chicago, Illinois; Detroit, Michigan; Columbus, Ohio; Cleveland, Ohio; Indianapolis, Indiana and Milwaukee, Wisconsin, to be completed by approximately the year 2005. SONET Xpress service areas are designated in National Exchange Carrier Association Tariff F.C.C. No. 4.

SONET Xpress/1/ service must be specifically ordered even if a customer premises or serving wire center is located in the designated SONET Xpress/1/ serving area.

SONET Xpress/1/ will provide 50 millisecond protection switching to assure 100 percent availability of the end to end services within the network. When a customer's end to end service utilizes both the SONET Xpress/1/ network and non SONET Xpress/1/ network, the non SONET Xpress/1/ network portion will have the appropriate service guarantees as specified in Section 2.4.4 preceding.

SONET Xpress Service/1/ is excluded from any application of Shared Use provisions as described in 7.4.9 following.

B. Channel Configuration

(1) Network Access Connection (NAC)

The Network Access Connection provides SONET based access to the SONET Xpress/1/ shared transport network. NACs are available with:

A) Electrical 1.544 Mbps (DS1) interface
B) Electrical 44.736 Mbps (DS3) interface
C) Optical 622.08 Mbps (OC-12) interface

The NAC is applicable when the customer's premises is located in a building on the SONET Xpress/1/ network.

/1/ Effective April 24, 2012, SONET Xpress is available only to existing Customers, for existing service arrangements. Existing Customers may continue to receive service under existing service arrangements, or on a month-to-month basis after their existing service arrangements expire, until SONET Xpress is discontinued.

7. Special Access Service (Cont'd)

7.2 Service Descriptions (Cont'd)

7.2.12 SONET Xpress Service[/1/] (Cont'd)

(B) Channel Configuration (Cont'd)

(1) Network Access Connection (NAC) (Cont'd)

The optical NAC interface provides 1+1 protection at the customer's premises and is available in two versions, one with lower level signals (DS1/VT1.5) sorted and grouped within an STS-1 signal by the customer and the other with lower level signals neither sorted nor grouped. When the customer chooses to sort and group the lower level signals, and based on the customer's requirements, each signal within the STS-1 group must be routed to:

a) one of two Telephone Company selected SONET Xpress[/1/] wire centers, or
b) any other Telephone Company wire center.

Both versions are available as 622.08 Mbps (OC-12) with:

a) DS1/VT1.5 or
b) DS3/STS-1 or
c) a mix of the DS1/VT1.5 and DS3/STS-1 signals up to 336 DS1/VT1.5 equivalents.

DS3 Payload Multiplexing Function (PMF) as described in 7.2.12(B)(3) below is not available with the DS3/STS-1 signals in the OC-12 NAC.

(2) Off-Network Access Connection (ONAC)

The Off-Network Access Connection provides a SONET based connection to the SONET Xpress[/1/] shared transport network at a company designated SONET Xpress[/1/] central office. ONACs are available with electrical 1.544 Mbps (DS1), 44.736 Mbps (DS3) as well as protected optical OC-3 and OC-12 interfaces. The ONAC is applicable when the customer's premises is not located in a building on the SONET Xpress[/1/] network.

In addition to the ONAC charge, the customer is responsible for the appropriate Local Distribution Channel Charge (and Channel Mileage and Channel Mileage Termination charges, if appropriate) from the customer premises to the ONAC location on the network.

In order to utilize the built in protection on an OC-3 or OC-12 ONAC, the customer must purchase a minimum of the basic 1+1 protection optional feature along with the appropriate Local Distribution Channel. 1+1 protection with Central Office Survivability is not available with SONET Xpress[/1/] service.

[/1/] Effective April 24, 2012, SONET Xpress is available only to existing Customers, for existing service arrangements. Existing Customers may continue to receive service under existing service arrangements, or on a month-to-month basis after their existing service arrangements expire, until SONET Xpress is discontinued.

7. Special Access Service (Cont'd)

7.2 Service Descriptions (Cont'd)

7.2.12 SONET Xpress Service[/1/] (Cont'd)

(B) Channel Configuration (Cont'd)

(3) DS3 Payload Multiplexing Function (PMF)

DS3 Payload Multiplexing Function provides the capability to multiplex up to 28 DS1 channels or 28 VT 1.5 channels with DS1 payload mapping to or from a specific DS3 channel or an STS-1 channel with DS3 payload mapping at a location determined by the Telephone Company within the SONET Xpress[/1/] Network. Customers can continue to maintain existing DS1 to DS3 traffic relationships while using SONET Xpress[/1/] access connections and banded transport. DS1 channels from across the serving area can be assigned to a specific DS3 channel for transport to a customer premises and/or a central office location. This option is only available when a DS1/VT1.5 is mapped or delivered to a DS3/STS-1 channel.

(4) Service Area Transport (SAT)

Service Area Transport provides SONET transport across the SONET Xpress[/1/] network. The transport is divided into three mileage bands, up to 3 miles, greater than 3 miles up to 10 miles and greater than 10 miles. Transport charges are based on the airline miles between the serving wire center of the NAC and (a), the serving wire center of another NAC or (b), an ONAC location, and/or between two ONAC locations. SAT is available as DS1/VT1.5 point to point, DS3/STS-1 point to point or DS3, OC-3 or OC-12 channelized SAT provided on a per DS1/VT1.5 basis.

The following is an example of the SONET Xpress[/1/] rate elements:

SONET Xpress Transport Services

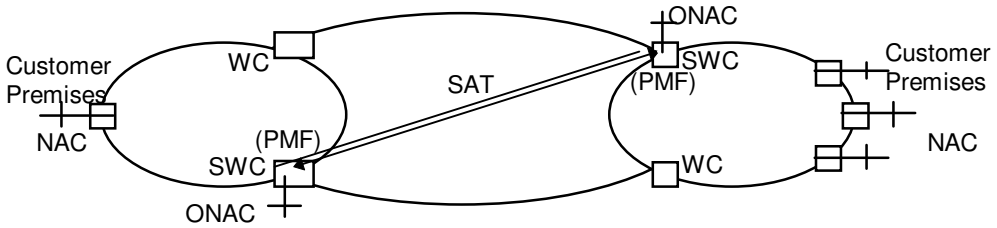

NAC = DS1, DS3 or OC-12 Network Access Connection
ONAC = DS1, DS3, OC-3 or OC-12 Off-Network Access Connection
SAT = DS1/VT1.5 or DS3/STS-1 Service Area Transport
PMF = DS3 Payload Multiplexing Function (if applicable)
SWC = Serving Wire Center
WC = Wire Center

[/1/] Effective April 24, 2012, SONET Xpress is available only to existing Customers, for existing service arrangements. Existing Customers may continue to receive service under existing service arrangements, or on a month-to-month basis after their existing service arrangements expire, until SONET Xpress is discontinued.

7. Special Access Service (Cont'd)

7.2 Service Descriptions (Cont'd)

7.2.12 SONET Xpress Service(2) (Cont'd)

(B) Channel Configuration (Cont'd)

(5) Shared Network Arrangement(1)

(a) A Shared Network Arrangement is a service offering that enables a customer ("Service User") to connect subtending services to the multiplexed DS3 NAC, OC-12 NAC, DS3 ONAC, OC-3 ONAC or OC-12 ONAC of another customer (the "Host Subscriber"), with the Telephone Company maintaining separate billing for each. Each customer will be billed for those rate elements associated with its own portion of the service configuration. Under no circumstances will the rates or charges of individual rate elements be split. This offering is limited to service configurations where a Service User obtains either subtending DS1 NAC or DS3 NACs from a Host's Multiplexed DS3 NAC, DS3 ONAC, OC-3 ONAC or OC-12 ONAC.

(b) Under the Shared Network Arrangement, the Telephone Company may share record information with the Host subscriber pertaining to the services of other users of the shared network. Such disclosure will be under the sole discretion of the Telephone Company and is necessary to perform billing reconciliation and/or other functions required in connection with maintaining account records.

(c) Section 7.4.12 contains rate regulations specific to Shared Network Arrangements.

(6) Technical Specifications Packages

The technical specifications for SONET Xpress(2) are described in Technical References, AM-TR-NIS-000111 and AM-TR-TMO-000101.

(C) Optional Payment Plan (OPP)

SONET Xpress(2) is available for 12, 24, 36, 48 or 60 month periods as described in Section 7.4.10 following. Monthly recurring charges apply for NAC, ONAC, SAT and PMF, if applicable.

(1) Effective 06/01/06, this regulation is limited to existing customers. For new customers purchasing Shared Network Arrangement, terms and conditions set forth in Section 5.2 (A), will apply.

(2) Effective April 24, 2012, SONET Xpress is available only to existing Customers, for existing service arrangements. Existing Customers may continue to receive service under existing service arrangements, or on a month-to-month basis after their existing service arrangements expire, until SONET Xpress is discontinued.

7. Special Access Service (Cont'd)

7.2 Service Descriptions (Cont'd)

7.2.13 Gigabit Ethernet Metropolitan Area Network (GigaMAN®)/1//2/ (C)

A. Basic Channel Description

GigaMAN® is a fiber based, point-to-point, gigabit Ethernet service that allows customers to transport data signals between local area networks (LANs). GigaMAN® transports data signals at the rate of 1 gigabit per second (Gbps). All basic service configurations provide a single direction of transmission.

The following regulations will apply to GigaMAN®:

1. This service is available to customers in those LATAs served by and within the service territory of Illinois Bell Telephone Company only.

2. If existing facilities do not exist Special Construction may apply.

3. Illinois Bell Telephone Company considers a service interrupted when it becomes unusable to the customer because of a failure of a facility component used to furnish service under this tariff or in the event that the protective controls applied by Illinois Bell Telephone Company result in the complete loss of service by the customer. An interruption period starts when a customer reports an inoperative service to Illinois Bell Telephone Company and Illinois Bell Telephone Company confirms that continuity has been lost, and ends when the service is operative.

4. Service Provisioning

   a. The customer provided equipment (CPE) must deliver the data signals for GigaMAN® transport for the subscribed data service.

   b. GigaMAN® provides physical layer transport only. Illinois Bell Telephone Company assumes no responsibility for the through transmission of signals generated by the CPE, for the signals by the CPE, or address signaling to the extent the CPE performs addressing. Error detection and correction of data generated by the CPE are the customer's responsibility.

/1/ Effective October 29, 2017, GigaMAN Service will no longer be available for new circuits. The Company will no longer accept orders for adds, moves, changes or new term plans for GigaMAN Service, and existing term plans may not be renewed, converted or extended. Following the expiration of a customer's existing GigaMAN term agreement, service will be provided on a month-to-month basis at the applicable monthly extension rates until the service is discontinued.

/2/ The Company currently plans to discontinue this Service on or after September 30, 2023. (N)

7. Special Access Service (Cont'd)

7.2 Service Descriptions (Cont'd)

7.2.13 Gigabit Ethernet Metropolitan Area Network (GigaMAN®)/1//2/ (Cont'd) (C)

B. Channel Configuration

There are 7 basic rate elements, which apply to GigaMAN® service:

1. Local Distribution Channel (LDC)

Local Distribution Channel is the termination of GigaMAN® at a customer-designated premise (node), as described in Section 7.1.2(A) consisting of the following two elements:

a. the termination of the fiber optic facilities at each node in the customer's network

b. the fiber optic facility between each node and its serving wire center

2. Channel Mileage Termination (CMT)

Channel Mileage Termination is the termination of digital transmission facilities (channel mileage) at serving or intermediate wire center(s) associated with two designated premises (nodes), as described in Section 7.1.2(B).

3. Channel Mileage (CM)

Channel mileage includes the interoffice fiber optic facilities that interconnect customer designated premises (node) serving wire centers and/or intermediate wire centers where Channel Mileage Termination charges apply, as described in Section 7.1.2(C). One channel mileage charge applies per-mile of interoffice transport segments between node serving wire centers, as described in Section 7.4.7.

4. Repeater

Repeaters (Circuit Regenerators) provide essential detection and retransmission of GigaMAN® signals. Repeaters are provided as required by the Telephone Company when actual fiber facility loss between customer designated premises and/or central office locations exceed design limits. Repeaters will be located exclusively in Telephone Company central offices and are required for each successive transport segment of approximately 21.4 db.

When protection options are ordered, as set forth in Section 7.2.13(K), additional repeaters may be necessary on the protected path as determined by the Telephone Company. The Repeater rate element will be applied to a protected circuit per fiber pair.

/1/ Effective October 29, 2017, GigaMAN Service will no longer be available for new circuits. See footnote on Page 153. (C)
/2/ The Company currently plans to discontinue this Service on or after September 30, 2023. (N)

ACCESS SERVICE

7. Special Access Service (Cont'd)

7.2 Service Descriptions (Cont'd)

7.2.13 Gigabit Ethernet Metropolitan Area Network (GigaMAN®)/1//2/ (Cont'd) (C)

B. Channel Configuration (Cont'd)

5. Local Channel Diversity

Local Channel Diversity provides for a transmission path between a designated customer premises and the standard service wire center (SWC) that is diverse from the normal/standard transmission path. With this arrangement, one or more local distribution channels will be provisioned over the standard route and one or more local distribution channels will be provisioned over the diverse route. Local channel diversity does not provide for all diversity, it only allows for diversity from the splice point closest to the customer's property line to the SWC. If a customer desires full diversity, arrangements must be made for constructing dual entrance facilities into the customer's premises, at the customer's expense.

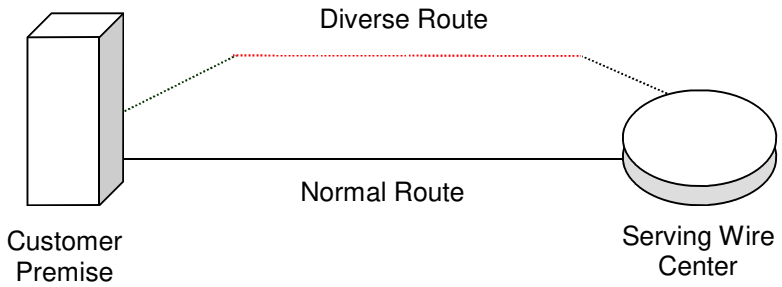

6. Inter-Wire Center (IWC) Diversity

Inter-Wire Center (IWC) Diversity arrangements presume that each end of a GigaMAN® local distribution channel is serviced out of a different serving wire center (SWC). This arrangement provides a transmission path for GigaMAN® local distribution channels between the customer's designated SWC and the SWC at the distant end of the circuit over a transmission path that is separate from the standard transmission path between the two wire centers. IWC diversity does not provide for full diversity. It only offers interoffice diversity. If a customer desires full diversity, Alternate Wire Center Diversity must be implemented along with IWC Diversity. Additionally, arrangements must be made for constructing dual entrance facilities at the customer's premises, at the customer's expense.

/1/ Effective October 29, 2017, GigaMAN Service will no longer be available for new circuits. See footnote on Page 153. (C)
/2/ The Company currently plans to discontinue this Service on or after September 30, 2023. (N)

ACCESS SERVICE

7. Special Access Service (Cont'd)

7.2 Service Descriptions (Cont'd)

7.2.13 Gigabit Ethernet Metropolitan Area Network (GigaMAN®)/1//2/ (Cont'd) (C)

B. Channel Configuration (Cont'd)

6. Inter-Wire Center (IWC) Diversity (Cont'd)

a. Inter-Wire Center (IWC) Diversity Mileage Measurement

Mileage measurements for Access Services provisioned via an Inter-Wire Center Diversity, will be based on the special routing; i.e. mileage measurements will be calculated between the Intermediate Serving Wire Centers along the circuit path of the Diversely routed GigaMAN® service.

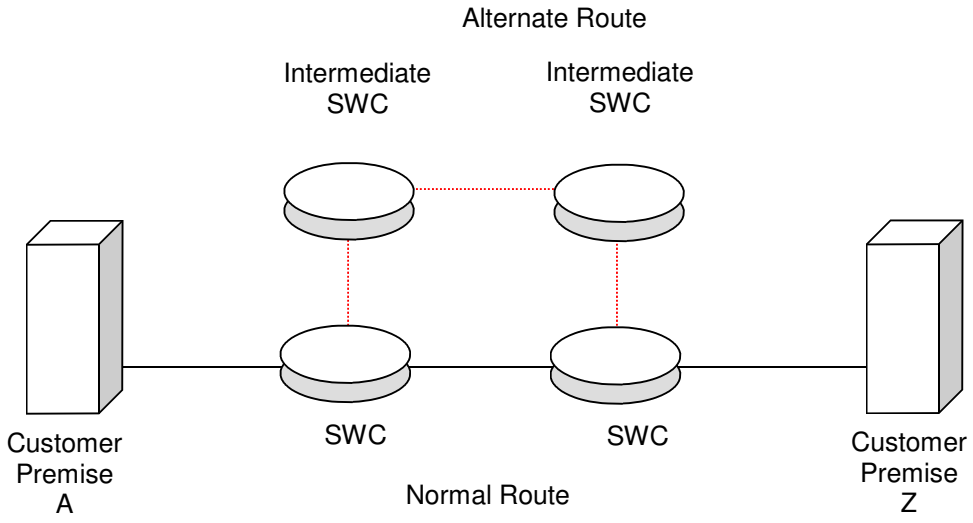

/1/ Effective October 29, 2017, GigaMAN Service will no longer be available for new circuits. See footnote on Page 153. (C)
/2/ The Company currently plans to discontinue this Service on or after September 30, 2023. (N)

ACCESS SERVICE

7. Special Access Service (Cont'd)

7.2 Service Descriptions (Cont'd)

7.2.13 Gigabit Ethernet Metropolitan Area Network (GigaMAN®)/1//2/ (Cont'd) (C)

B. Channel Configuration (Cont'd)

7. Alternate Wire Center Diversity

Alternate Wire Center Diversity is for the local loop only. It provides a local channel transmission path for GigaMAN® service between the customer's designated premises and a wire center that is not the normal (or standard) service wire center. The Telephone Company will choose the alternate wire center closest to the customer's designated premises that is capable of providing GigaMAN® service over the alternate route. If a customer desires full diversity, arrangements must be made for constructing dual entrance facilities into the customer's premises, at the customer's expense.

If the circuit routed to the alternate wire center has Interoffice Mileage, measurements will be based on the special routing; i.e., mileage measurements will be made to the alternate wire center rather than the serving wire center from which the customer designated premises would normally obtain dial tone.

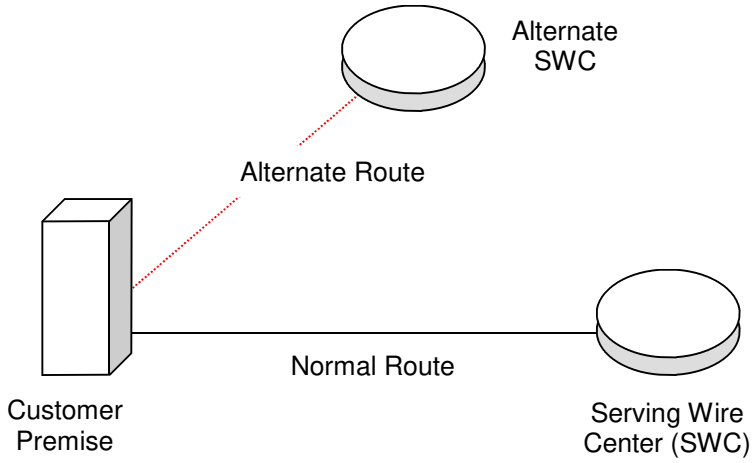

/1/ Effective October 29, 2017, GigaMAN Service will no longer be available for new circuits. See footnote on Page 153. (C)
/2/ The Company currently plans to discontinue this Service on or after September 30, 2023. (N)

7. Special Access Service (Cont'd)

7.2 Service Descriptions (Cont'd)

7.2.13 Gigabit Ethernet Metropolitan Area Network (GigaMAN)/1//2/ (Cont'd) (C)

C. Nonrecurring Charges

Nonrecurring charges are one-time charges that apply for specific work activity related to the provisioning of GigaMAN® Service, as described in Section 7.4.2.

D. Recurring Charges

Recurring Charges are rates that apply each month or fraction thereof that the service is provided. Recurring rates apply to 12-, 36-, or 60-month period under the terms and conditions of Term Pricing Plan (TPP), discussed in Section 7.2.1 (F).

E. Monthly Extension Rates

Upon completion of a TPP, a customer's service will automatically convert to the Monthly Extension Rates unless the customer requests a new TPP.

F. Term Pricing Plan (TPP)

GigaMAN® is available for 12-, 36-, or 60- month periods. Monthly recurring charges apply for Local Distribution (TMECS), Channel Mileage Termination (CM6), and Channel Mileage (1L5XX) where appropriate.

1. Renewals

At the end of a TPP period, the customer must select one of the following options within one month prior to the expirations date:

a. Renew the service for a one, three, or five year TPP as provided in this tariff;
b. Elect to disconnect the service upon expiration of the billing period; or
c. Continue the service on a monthly basis at the current monthly extension rates.

All services under an existing TPP that are not renewed within the period stated above will revert to Option (1)c above and be billed at the current monthly extension rates.

2. Conversions

During a customer's TPP term, conversions may be made to a new TPP term of the same or greater length. The expiration date of the new service must be beyond the expiration date of the original TPP term. With the new TPP, the customer incurs no liability for the remaining months on the original TPP.

An Administrative Charge is applicable when customers renew or change the length of the TPP term.

/1/ Effective October 29, 2017, GigaMAN Service will no longer be available for new circuits. See footnote on Page 153. (C)
/2/ The Company currently plans to discontinue this Service on or after September 30, 2023. (N)

7. Special Access Service (Cont'd)

7.2 Service Descriptions (Cont'd)

7.2.13 Gigabit Ethernet Metropolitan Area Network (GigaMAN)/1//2/ (Cont'd) (C)

F. Term Pricing Plan (TPP) (Cont'd)

3. Termination Liability

Customers requesting termination of service prior to expiration date of the TPP term will be liable for a termination charge equal to fifty percent (50%) of the Monthly Recurring Rate for the number of months remaining in the applicable TPP term, which is calculated as follows:

(Monthly Recurring Rate) X (Months Remaining in TPP term) X (50%) = Termination Liability Charge

Example: A GigaMAN® Customer with $6,000.00 monthly rate terminates service after 2 years with 1 year (12 months) remaining in a 3 year TPP. The termination liability charge would be calculated as:

$6,000 X 12 X .50 = $36,000.00 Termination Liability.

G. Moves

Moves involve a change in the physical location of one of the following:

- Service rearrangement;
- Point of Termination at the customer's premises; or
- Customer's premises.

Move charges are dependant upon the type of move requested by the customer.

1. Service Re-arrangement

Service rearrangements are changes to existing (installed) services, which do not result in either a change in the minimum period requirements, as set forth in Section 5.2.5 preceding, or a change in the physical location of the point termination at a customer or customer's end user premises, as described in Section 7.4.2.

/1/ Effective October 29, 2017, GigaMAN Service will no longer be available for new circuits. See footnote on Page 153. (C)
/2/ The Company currently plans to discontinue this Service on or after September 30, 2023. (N)

7. Special Access Service (Cont'd)

7.2 Service Descriptions (Cont'd)

7.2.13 Gigabit Ethernet Metropolitan Area Network (GigaMAN)/1//2/ (Cont'd) (C)

G. Moves (Cont'd)

2. Moves Within the Same Building

When the move is to a new location within the same building, the Administration charge and Customer Connection charge for the service termination affected will apply. There will be no change in the minimum period requirements, as described in section 7.4.6.

3. Moves to a Different Building

Moves to a different building will be treated as a discontinuance and start of service and all associated nonrecurring charges will apply. New minimum period requirements will be established for the new services. The customer will also remain responsible for satisfying all outstanding minimum period charges for the discontinued service, as described in 7.4.6.

4. GigaMAN® customers subscribing to three (3) and five (5) year Term Pricing Plans may move one end of the GigaMAN® service per the following regulations:

(a) A customer may move one end of the GigaMAN® service to a different premises in the same LATA, without incurring early termination liability charges for their existing GigaMAN® service, providing the following criteria are met, contingent upon the availability of fiber from premises to premises.

- Customers must have completed at least 15 months (for 3 year term plan), and 18 months (for 5 year term plan) of their existing GigaMAN® contracted term plan,

- The customer subscribes to a new term pricing plan period that is greater than the remaining months in the existing term pricing plan,

- Nonrecurring charges will apply where applicable,

- Spare facilities and equipment must be available or special construction charges, as set forth in SBC Illinois Tariff No. 20, Part 2, Section 5 may apply.

/1/ Effective October 29, 2017, GigaMAN Service will no longer be available for new circuits. See footnote on Page 153. (C)
/2/ The Company currently plans to discontinue this Service on or after September 30, 2023. (N)

7. Special Access Service (Cont'd)

7.2 Service Descriptions (Cont'd)

7.2.13 Gigabit Ethernet Metropolitan Area Network (GigaMAN)/1//2/ (Cont'd) (C)

G. Moves (Cont'd)

4. (Cont'd)

(a) (Cont'd)

The moved service will require a disconnect of the existing GigaMAN® service and placement of an order for the new GigaMAN® service for same customer of record as disconnected service.

The monthly rates for the new services(s) shall be those rates in effect at the time the new service(s) is being installed requiring a disconnect of the existing GigaMAN® service and placement of an order for new GigaMAN® service.

(b) The GigaMAN® service installed without protection and customer subsequently request protection options after the GigaMAN® order has been completed, and customer premises locations remain the same. This will require a change to the customer premises based Telephone Company equipment. This change will be treated as an upgrade to the GigaMAN® service, and a new nonrecurring charge is applicable. This change will require a disconnect of the existing GigaMAN® service and placement of an order for the new GigaMAN® service for the same customer of record. With this upgrade the customer will experience an out of service condition.

(c) The GigaMAN® service was installed with protection options and the customers subsequently requests a move of the channel termination within the same building afterwards. This request may require a change to the customer premises based Telephone Company equipment which will be determined by the Telephone Company. Nonrecurring charges as set forth in Section 7.5.15 following are applicable (one-half the nonrecurring charge for the channel termination). With this upgrade the customer will experience an out of service condition.

H. Mileage Measurement

The mileage is calculated on the airline distance between the locations involved, i.e., the serving wire centers associated with two customer-designated premises, the serving wire center associated with a customer designated premises and an international boundary point, a serving wire center associated with a customer designated premises and a Telephone Company Hub, a serving wire center associated with a customer designated premises and a WATS Serving Office as described in Section 7.4.7.

/1/ Effective October 29, 2017, GigaMAN Service will no longer be available for new circuits. See footnote on Page 153. (C)
/2/ The Company currently plans to discontinue this Service on or after September 30, 2023. (N)

7.2 Service Descriptions (Cont'd)

7.2.13 Gigabit Ethernet Metropolitan Area Network (GigaMAN®)/1//2/ (Cont'd) (C)

I. Upgrades

An upgrade is considered an increase in speed or capacity when comparing GigaMAN® Service to the new service. Customers will be permitted to upgrade to a higher-speed service provided by the Company, without incurring Termination Charges, given all of the following conditions are met:

(1) The customer must issue a disconnect order for the existing GigaMAN® Service and place a service order for the new higher-speed service at the same locations such that there is no more than 90 days overlap in service.

(2) The new higher-speed service term must be equal to or greater than the remaining time left on the existing GigaMAN® term.

(3) The existing GigaMAN® Service must have been in service for a minimum period of 15 months for a 36-month term or 18 months for a 60-month term. Existing GigaMAN® Service with 12-month terms will not be eligible for this upgrade option.

The monthly rates for the new service will be those rates in effect at the time the new service is installed.

Migration to AT&T Dedicated Ethernet
Customers subscribing to GigaMAN® Service may migrate to AT&T Dedicated Ethernet provided by the Company without incurring Termination Charges, subject to the following conditions:

(1) The new AT&T Dedicated Ethernet and the existing GigaMAN® Service must be billed to the same customer of record at the same customer locations.

(2) The customer's existing service must have been in place for at least 12 months.

(3) The minimum term for the new service must be at least 12 months and must be equal to or greater than the number of months remaining in the customer's existing Term Payment Plan (TPP) term.

(4) The speed (capacity/bandwidth) of the new service must be equal to or greater than that of the existing service.

(5) The customer must issue a disconnect order for the replaced GigaMAN® Service to be effective within 90 days after the AT&T Dedicated Ethernet installation date. The disconnect and new orders must be coordinated through the Company.

(6) If overlapping service is required, the period will be limited to not more than 90 days and billing will apply to both services during the time both services are available.

/1/ Effective October 29, 2017, GigaMAN Service will no longer be available for new circuits. See footnote on Page 153. (C)
(D)

/2/ The Company currently plans to discontinue this Service on or after September 30, 2023. (N)

7.2 Service Descriptions (Cont'd)

7.2.13 Gigabit Ethernet Metropolitan Area Network (GigaMAN®)/1//2/ (Cont'd) (C)

J. Modification of Access Service

The customer may request a modification of its Access Order at anytime prior to notification by Illinois Bell Telephone Company that service is available for the customer's use. Illinois Bell Telephone Company will make every effort to accommodate a requested modification when it is able to do so with the normal work force assigned to complete such an order within normal business hours. If the modification cannot be made with the normal work force during normal business hours, Illinois Bell Telephone Company will notify the customer. If the customer still desires the Access Order Modification, Illinois Bell Telephone Company will schedule a new service date. All Charges for Access Order modifications will apply on a per occurrence basis as described in Section 5.2.2.

(D)

/1/ See Page 153 for Service availability information. (N)
/2/ The Company currently plans to discontinue this Service on or after September 30, 2023. (N)

7.2 Service Descriptions (Cont'd)

7.2.13 Gigabit Ethernet Metropolitan Area Network (GigaMAN®)/1//2/ (Cont'd) (C)

K. Optional Features

1. Protection Options

Protection options are provisioned on the customers GigaMAN® service and the customer is not required to purchase a second GigaMAN® circuit for protection options. Protection options are applied on a per GigaMAN® circuit basis only.

Protection options are available where facilities and/or operating conditions permit. Where facilities and/or operating conditions do not permit, Special Construction charges as set forth in SBC Illinois Tariff No. 20, Part 2, Section 5, may apply. Protection options provide additional levels of reliability to GigaMAN® service. There are multiple protection options offered. The options do no need to be the same, but both Channel Terminations of the GigaMAN® service must include some form of protection for the service to be considered protected.

The Telephone Company will design the protection optional based upon the configuration of the customers GigaMAN® service.

Additional repeaters may be necessary on the protected path as determined by the Utility a set forth in Section 7.4.16(B) following.

Protection switching in less than 50 milliseconds will occur on GigaMAN® services with Protection options, with the exception of Power Protection which is not switch protected. Protection options are offered with a Service Level Agreements (SLA) that target a service availability of 99.999%.

/1/ Effective October 29, 2017, GigaMAN Service will no longer be available for new circuits. See footnote on Page 153. (C)
/2/ The Company currently plans to discontinue this Service on or after September 30, 2023. (N)

7. Special Access Service (Cont'd)

7.2 Service Descriptions (Cont'd)

7.2.13 Gigabit Ethernet Metropolitan Area Network (GigaMAN®)/1//2/ (Cont'd) (C)

K. Optional Features (Cont'd)

1. Protection Options (Cont'd)

SLA's are not applicable in the event of cable cut in any unprotected portion of the GigaMAN® service fiber path or when customer requested modifications to the service require down time.

GigaMAN® Protection Options are offered as follows:

(a) Equipment Only Protection – per Termination End.

(b) Equipment Plus Fiber Path Protection

(1) Equipment Plus Alternate Wire Center Path Protection – per Terminating End

(2) Equipment Plus Channel Termination Path Protection – per Terminating End

(3) Inter Wire Center Path Protection – per Interoffice Segment

(c) Power Protection

2. Equipment Only Protection

Equipment Only Protection offers one GigaMAN® signal routed on two different fiber pairs that co-exist in the same cable and conduit structure that terminate into two distract and separate network terminating equipment devices at the customer's premises.

All protected configurations have one working and one standby path. In event of a failure of the customer's transmission path, the GigaMAN® equipment will switch, within 50 milliseconds of detection, the customer's transmission to a dedicated standby path. In the event of a failure to both fiber transmission paths, an out of service condition will result. This form of protection can only be ordered per channel termination for each protected GigaMAN® service, and may also apply to the Inter-Wire center segment if the GigaMAN® service is served by more than one serving wire center.

/1/ Effective October 29, 2017, GigaMAN Service will no longer be available for new circuits. See footnote on Page 153. (C)
/2/ The Company currently plans to discontinue this Service on or after September 30, 2023. (N)

7. Special Access Service (Cont'd)

7.2 Service Descriptions (Cont'd)

7.2.13 Gigabit Ethernet Metropolitan Area Network (GigaMAN®)/1//2/ (Cont'd) (C)

K. Optional Features (Cont'd)

2. Equipment Only Protection (Cont'd)

If a customer requests complete protection extending to the SBC serving wire center from their premises location when utilizing Equipment Protection, they must request diverse entrance facilities into their premises at each end from the nearest SBC splice point closest to the customer premises location, this work is subject to special construction charges as set forth in SBC Illinois Tariff No. 20, Part 2, Section 5.

3. Equipment Plus Fiber Path Protection

Equipment Plus Fiber Path Protection offers varying degrees of path protection for each channel termination of the GigaMAN® service, plus the inter-wire segment if the service is served by more than one serving wire center, and is offered as follows:

(a) Equipment Plus Alternate Wire Center Path Protection

Equipment Plus Alternate Wire Center Path Protection offers one GigaMAN® signal routed over one fiber pair of the protected GigaMAN® service from the customer's premises to the customer's normal serving wire center, and a duplicate GigaMAN® signal routed over a diversely routed fiber pair to the alternate wire center selected by the Telephone Company.

If any location(s) between the two fiber paths is closer than ten feet, the location will be disclosed to the customer. The customer will determine accept the engineered path or agree to pay special construction charges as set forth in SBC Illinois Tariff No. 20, Part 2, Section 5, to provide a completely diverse route where the ten foot allowance is not acceptable to the customer.

Where facilities are not available, the Customer may select Equipment Only Protection for an inter-office segment. This option can be selected for one or both channel terminations of the GigaMAN service.

All protected configurations have one working and one standby path. In the event of a failure of the customer's transmission path, the GigaMAN service will switch to a dedicated standby path within 50 milliseconds of detection. In the event of a failure to both fiber transmission paths, an out of service condition will result. This form of protection can only be ordered per channel termination for each protected GigaMAN service.

/1/ Effective October 29, 2017, GigaMAN Service will no longer be available for new circuits. See footnote on Page 153. (C)
/2/ The Company currently plans to discontinue this Service on or after September 30, 2023. (N)

ACCESS SERVICE

7. Special Access Service (Cont'd)

7.2 Service Descriptions (Cont'd)

7.2.13 Gigabit Ethernet Metropolitan Area Network (GigaMAN®)/1//2/ (Cont'd) (C)

K. Optional Features (Cont'd)

3. Equipment Plus Fiber Path Protection (Cont'd)

(a) Equipment Plus Alternate Wire Center Path Protection (Cont'd)

If a customer requests complete protection extending to the SBC serving wire center from their premises location when utilizing Equipment Protection Plus Alternate Wire Center Path Protection, they must request diverse entrance facilities into their premises at each end from the nearest SBC splice point closest to the customer premise location. This work is subject to special construction charges as set forth in SBC Illinois Tariff No. 20, Part 2, Section 5.

(b) Equipment Plus Channel Termination Path Protection

Equipment Plus Channel Termination Path Protection offers a duplicate GigaMAN® signal routed over two diversely routed fiber paths, to the customer's normal serving wire center.

If any location(s) between two fiber paths is closer than ten feet, the location(s) will be disclosed to the customer. The customer will determine whether to accept the engineered path or agree to pay special construction charges as set forth in SBC Illinois Tariff No. 20, Part 2, Section 5, to provide a completely diverse route where the ten foot allowance is not acceptable to the customer.

All protected configurations have one working and one standby path. In the event of a failure of the customer's transmission path, GigaMAN® technology will switch within 50 milliseconds of detection, the customer's transmission to a dedicated standby path. In the event of failure to both fiber transmission to a dedicated standby path. In the event of a failure to both fiber transmission paths, an out to service condition will result.

This form of protection can only be ordered per channel termination for each protected GigaMAN® service, from the customers premises location, or from the manhole/splice point nearest the customer premises), to the Utility serving wire center.

/1/ Effective October 29, 2017, GigaMAN Service will no longer be available for new circuits. See footnote on Page 153. (C)
/2/ The Company currently plans to discontinue this Service on or after September 30, 2023. (N)

7. Special Access Service (Cont'd)

7.2 Service Descriptions (Cont'd)

7.2.13 Gigabit Ethernet Metropolitan Area Network (GigaMAN®)/1//2/ (Cont'd) (C)

K. Optional Features (Cont'd)

3. Equipment Plus Fiber Path Protection (Cont'd)

(b) Equipment Plus Channel Termination Path Protection (Cont'd)

If a customer requests complete protection extending to the SBC serving wire center from their premises location when utilizing Equipment Protection Plus Channel Termination Path Protection, they must request diverse entrance facilities into their premises at each end from the nearest SBC splice point closest to the customer premises location. This work is subject to special construction charges as set forth in SBC Illinois Tariff No. 20, Part 2, Section 5.

(c) Inter-Wire Center Path Protection

Inter-Wire Center Path Protection offers a duplicate GigaMAN® signal routed over two diversely routed fiber paths, between the two serving wire centers or alternate wire centers. Path protection starts at the nearest manhole outside the Telephone Company serving wire center. Inter-Wire Center Path Protection must be ordered with either Equipment Only, Channel Termination Path Protection or Alternate Wire Center Path Protection.

If any location(s) between the two fiber paths is closer than ten feet, the location will be disclosed to the customer. The customer will determine to accept the engineered path or agree to pay special construction charges as set forth in SBC Illinois Tariff No. 20, Part 2, Section 5, to provide a completely diverse route where the ten foot allowance is not acceptable to the customer.

All protected configurations have one working and one standby path. In the event of a failure of the customer's transmission path, GigaMAN® technology will switch, within 50 milliseconds of detection, the customer's transmission to a dedicated standby path. In the event of a failure to both fiber transmission paths, an out of service condition will result.

/1/ Effective October 29, 2017, GigaMAN Service will no longer be available for new circuits. See footnote on Page 153. (C)
/2/ The Company currently plans to discontinue this Service on or after September 30, 2023. (N)

ACCESS SERVICE

7. Special Access Service (Cont'd)

7.2 Service Descriptions (Cont'd)

7.2.13 Gigabit Ethernet Metropolitan Area Network (GigaMAN®)/1//2/ (Cont'd) (C)

K. Optional Features (Cont'd)

3. Equipment Plus Fiber Path Protection (Cont'd)

(d) Power Protection

Power Protection provides GigaMAN® customers with battery backup for up to eight (8) hours to maintain GigaMAN® equipment in the event of a commercial AC power failure.

Power Protection is offered on a per equipment bay capacity basis, per customer premise, and depending upon the number of GigaMAN® services for the GigaMAN® customer of record. The Telephone Company will apply the power protection rate elements based upon the circuit capacity, and more than one element may be applicable. The Telephone Company will determine the design and engineering requirements for Power Protection for GigaMAN® customers.

Customers in multi-tenant buildings will require separate equipment and bays dedicated to each customer.

The addition of Power Protection to existing GigaMAN® service may result in temporary service interruption.

Power Protection is not available for installations using the wall mounted cabinet.

Customers are responsible for providing floor space for power equipment as set forth in Section 2.3.3 preceding.

/1/ Effective October 29, 2017, GigaMAN Service will no longer be available for new circuits. See footnote on Page 153. (C)
/2/ The Company currently plans to discontinue this Service on or after September 30, 2023. (N)

7. Special Access Service (Cont'd)

7.2 Service Descriptions (Cont'd)

7.2.13 Gigabit Ethernet Metropolitan Area Network (GigaMAN®)/1//2/ (Cont'd) (C)

L. Allowance for Service Interruptions

GigaMAN® (Not Fully Protected)

The GigaMAN® outage credits listed below are in lieu of, and not in addition to, the outage credit allowances provided for in the General Conditions Section of this Guidebook.

A service is interrupted when it becomes unusable to the customer because of a failure of a facility component used to furnish service under this Guidebook, or in the event that the protective controls applied by the Company result in the complete loss of service by the customer. An interruption period starts when an inoperative service is reported to the Company and the Company confirms that continuity has been lost, and ends when the service is operative.

In case of an interruption to GigaMAN® service, allowance for the period of interruption, if not due to the negligence of the customer or the customer's end user, shall be as follows: no credit shall be allowed for an interruption of less than 10 seconds. The customer shall be credited for an interruption of 10 seconds or more as follows: the credit shall be at the rate of 10/8640 of the monthly charges for the service for each period of 5 minutes or major fraction thereof that the interruption continues. The credit allowance(s) for service interruptions shall not exceed 100 percent of the applicable monthly rates.

The Company's failure to provide or maintain services under this Guidebook shall be excused by force majeure events such as, but not limited to, an earthquake, hurricane, flood, fire, storms, tornadoes, explosion, lightning, power surges or failure, fiber cuts, strikes or labor disputes, acts of war, civil disturbances, acts of civil or military authorities or public enemy, governmental orders, civil commotion, criminal actions taken against the Company, acts of God and other circumstances beyond the Company's reasonable control.

/1/ Effective October 29, 2017, GigaMAN Service will no longer be available for new circuits. See footnote on Page 153. (C)
/2/ The Company currently plans to discontinue this Service on or after September 30, 2023. (N)

7. Special Access Service (Cont'd)

7.2 Service Descriptions (Cont'd)

7.2.13 Gigabit Ethernet Metropolitan Area Network (GigaMAN®)/1//2/ (Cont'd) (C)

L. Allowance for Service Interruptions

GigaMAN® (Fully Protected)

A Service Level Agreement (SLA) is offered with fully-protected GigaMAN® service, which provides the customer with a performance commitment that includes financial compensation if the service does not perform as described.

Service availability performance 99.999% is offered on a GigaMAN® service with protection (defined as Equipment Plus Path Protection) for every segment of the service.

If this SLA is not met, the customer will be entitled to a credit equal to 100% of the monthly rate for the period of the interruption of service affecting that rate element, not to exceed the total monthly charges for the services. Only one such credit in a billing period will apply.

The service is considered interrupted when the customer reports a service disruption of greater than ten (10) consecutive seconds to the Telephone Company and the Telephone Company confirms that continuity of its service has been lost.

In order to qualify for this credit, the outage must be determined by the Telephone Company to be in its network and the failure occurred in that part of the service with the protection. SLA adjustments are not available in the event of a cable cut, in any unprotected portion of the GigaMAN® service fiber path, or due to customer requested modifications to the service that may require down time.

SLAs are applicable to customers who purchase Equipment Plus Alternate Wire Center Path Protection or Equipment Plus Channel Termination Path Protection on both ends of a GigaMAN® service (both channel terminations) as well as Inter-Wire Center Path Protection when applicable. The customer is responsible for notifying the Telephone Company when the service parameter within the calendar month falls below the committed level. The customer must request a service credit adjustment within 25 days after the end of the month when the failure occurred.

7.3 Network Channel Interface and Network Channel Codes

The Network Channel Interface (NCI) and the Network Channel codes (NC) and all other associated material which previously appeared in this section are now contained in Ameritech Technical Publication AM-TR-TMO-000080.

/1/ Effective October 29, 2017, GigaMAN Service will no longer be available for new circuits. See footnote on Page 153. (C)
/2/ The Company currently plans to discontinue this Service on or after September 30, 2023. (N)

7. Special Access Service (Cont'd)

7.3 Network Channel Interface and Network Channel Codes

7. Special Access Service (Cont'd)

7.3 Network Channel Interface and Network Channel Codes

7. Special Access Service (Cont'd)

7.3 Network Channel Interface and Network Channel Codes

7. Special Access Service (Cont'd)

7.3 Network Channel Interface and Network Channel Codes

7. Special Access Service (Cont'd)

7.3 Network Channel Interface and Network Channel Codes

7. Special Access Service (Cont'd)

7.3 Network Channel Interface and Network Channel Codes

7. Special Access Service (Cont'd)

7.3 Network Channel Interface and Network Channel Codes

7. Special Access Service (Cont'd)

7.3 Network Channel Interface and Network Channel Codes

7. Special Access Service (Cont'd)

7.3 Network Channel Interface and Network Channel Codes

7. Special Access Service (Cont'd)

7.3 Network Channel Interface and Network Channel Codes

7. Special Access Service (Cont'd)

7.3 Network Channel Interface and Network Channel Codes

7. Special Access Service (Cont'd)

7.3 Network Channel Interface and Network Channel Codes

7. Special Access Service (Cont'd)

7.3 Network Channel Interface and Network Channel Codes

7. Special Access Service (Cont'd)

7.3 Network Channel Interface and Network Channel Codes

7. Special Access Service (Cont'd)

7.3 Network Channel Interface and Network Channel Codes

7. Special Access Service (Cont'd)

7.3 Network Channel Interface and Network Channel Codes

7. Special Access Service (Cont'd)

7.3 Network Channel Interface and Network Channel Codes

7. Special Access Service (Cont'd)

7.3 Network Channel Interface and Network Channel Codes

7. Special Access Service (Cont'd)

7.3 Network Channel Interface and Network Channel Codes

7. Special Access Service (Cont'd)

7.3 Network Channel Interface and Network Channel Codes

7. Special Access Service (Cont'd)

7.3 Network Channel Interface and Network Channel Codes

7. Special Access Service (Cont'd)

7.3 Network Channel Interface and Network Channel Codes

7. Special Access Service (Cont'd)

7.3 Network Channel Interface and Network Channel Codes

7. Special Access Service (Cont'd)

7.3 Network Channel Interface and Network Channel Codes

7. Special Access Service (Cont'd)

7.3 Network Channel Interface and Network Channel Codes

7. Special Access Service (Cont'd)

7.3 Network Channel Interface and Network Channel Codes

7. Special Access Service (Cont'd)

7.3 Network Channel Interface and Network Channel Codes

7. Special Access Service (Cont'd)

7.4 Rate Regulations

This section contains the specific regulations governing the rates and charges that apply for Special Access Service.

Effective November 3, 2017, Competitive Counties and Non-Competitive Counties have been established and are defined in Section 2.6 and the wire centers within such counties are listed in Sections 14.2.3 and 14.2.4.

For all rate elements other than End User Local Distribution Channels and their applicable optional features,(2) price flex rates and charges, as provided in Section 21.5.2, apply, regardless of whether the county is Competitive or Non-Competitive.

For End User Local Distribution Channels and their applicable optional features,(1)(2) the application of "price cap" or "price flex" is dependent upon whether or not the serving wire center is located in a Competitive County. If the End User Local Distribution Channel is in a Competitive County, price flex rates and charges apply, as provided in Section 21.5.2. If the End User Local Distribution Channel is in a Non-Competitive County, price cap rates and charges apply, as provided in Section 7.5.

7.4.1 Rate Zones

Rate zones are applicable to DS1 (1.544 Mbps) and DS3 (44.736 Mbps) services described in this section, and Special Facilities Routing Arrangements for these services as described in Section 11, following. Each Telephone Company Wire Center, under an Optional Payment Plan term, has been assigned to a rate zone. To determine the rate zone wire center assignments use the following:

- For DS1 and DS3 services subscribed to prior to March 17, 2001, the wire center rate area assignments can be found in ILL CC No. 20, Part 4, Section 2.
- For DS1 and DS3 services subscribed to on or after March 17, 2001, the wire center rate zone assignments included in the National Exchange Carrier Association, Inc. (NECA) F.C.C. Tariff No. 4 are assigned to rate zones 1, 2, 3, 4 and 5. All other Telephone Company offices are assigned to zone 5.

In addition, Local Distribution Channel, Channel Mileage and Channel Mileage Termination rates are dependent upon the zone assignment of the Serving Wire Center. Channel Mileage and Channel Mileage Termination that is computed between wire centers in different rate zones will be assessed the rates in the higher priced rate zone. Multiplexing rates will be determined by the location of the multiplexing arrangement.

7.4.2 Types of Rates and Charges

There are three types of rates and charges. These are monthly rates, daily rates and nonrecurring charges. The rates and charges are described as follows:

(A) Monthly Rates

Monthly rates are flat recurring rates that apply each month or fraction thereof that a Special Access Service is provided. For billing purposes, each month is considered to have 30 days.

Note: Base Rate Service rate areas will continue to be found in ILL. C.C. No. 20, Part 4, Section 2.

(1) Until February 1, 2018, End User Local Distribution Channels and their applicable optional features that had not qualified for Phase II, Level 2 pricing flexibility prior to June 1, 2017, will be rated at the price cap rate regardless of the status of the county in which the applicable wire center is located.

(2) Optional features for End User channel terminations includes all optional features in Section 7.5, except for the Transfer Arrangement and Network Reconfiguration Service.

7. Special Access Service (Cont'd)

7.4 Rate Regulations (Cont'd)

7.4.2 Types of Rates and Charges (Cont'd)

(A) Monthly Rates (Cont'd)

Each DS3 Service Package with an Optical Interface provides the capability to provision a maximum number of DS3 (44.736 Mbps) channels. The DS3 Service Channels (SC) are the individually activated 44.736 Mbps channels. Each DS3 Service Package with an Optical Interface must have a minimum number of service channels activated at all times. A new DS3 Service Package with an Optical Interface must be installed with at least the minimum required Service Channels. A customer may not disconnect Service Channels from an existing DS3 Service Package with an Optical Interface below the minimum required in that package without downgrading the Service Package size or terminating the DS3 LDC Service.

DS3 Service Package With Optical Interface	Minimum Required SCs	Maximum Number of DS3 Equivalent SCs in Package
DS3012	7	12
DS3024	13	24

All DS3 Service Channels within the package must be ordered for termination at the same customer designated premises, billed to the same customer and in the same Serving Wire Center (SWC). Separate DS3 Service Packages with an Optical Interface must be ordered if provisioned by means of a Local Channel Diversity or a Serving Wire Center Avoidance Special Facilities Routing Arrangement as specified in 11.2.1 following. All Service Channels in a package are required to be connected to other service components (i.e., Channel Mileage, Multiplexing, or another Service Channel) at the time the Service Channel is installed, except at the fiber hub.

ACCESS SERVICE

7. Special Access Service (Cont'd)

7.4 Rate Regulations (Cont'd)

7.4.2 Types of Rates and Charges (Cont'd)

(A) Monthly Rates (Cont'd)

The interconnection of individual Service Channels with other components, such as Channel Mileage and Multiplexing, may be different. For example, one Service Channel within the package may have Multiplexing, while another Service Channel may have Channel Mileage associated with it. Components connected to each Service Channel in the service package may have different Optional Payment Plan periods from the service package in which the Service Channels reside.

(B) Daily Rates

Daily rates are flat recurring rates that apply to each 24 hour period or fraction thereof that a Video Special Access Service is provided for part-time or occasional use. For purposes of applying daily rates, the 24 hour period is not limited to a calendar day. (D)

The application of daily rates for Video services during a consecutive 30 day period is as follows. Daily rates will be topped at an amount equal to the monthly rate (i.e., the charge to the customer for usage billed at Daily rates will not exceed the monthly rate). For each day or part day of usage after the daily rates have been topped, a charge equal to 1/30th of the monthly rate will apply. (D)

(C) Hourly

Hourly rates are flat recurring rates that apply to each hour period or fraction thereof t
a Video Special Access Service is provided.

(D)
|
(D)

7. Special Access Service

7.4 Rate Regulations (Cont'd)

7.4.2 Types of Rates and Charges (Cont'd)

(C) Nonrecurring Charges/1/

Nonrecurring charges are one-time charges that apply for specific work activity (i.e., installation of new services and rearrangements of installed services). The nonrecurring charges that apply for installation of Special Access Service are described in (1) through (3), following. Application of nonrecurring charges for service rearrangements is described in (6), following.

Certain optional features and functions also have separate installation nonrecurring charges as described in (4), following. There are also separate nonrecurring charges for circuit record work associated with hub rearrangements. Applications of these charges is described in (5), following.

(1) Administrative Charge

The Administrative Charge applies any time a customer initiates an order for service. This charge applies once per Customer order, as described in Section 5.1 preceding. Administrative Charges for Special Access Service are set forth in 7.5.15 following.

(2) Design and Central Office Connection Charge

The Design and Central Office Connection Charge applies to each service installed, and is charged once per circuit. The nonrecurring charges for design and central office connection are set forth in 7.5.15 following.

(3) Customer Connection Charge

The Customer Connection Charge applies to each service installed, and is charged once per Local Distribution Channel. The nonrecurring charges for customer connection are set forth in 7.5.15 following.

If a single order involves 500 or more terminations at the same location on the same Customer requested date, the individual nonrecurring charges for the services provided will not apply, except for the Administrative Charge. The Customer will be notified and will be provided

/1/ For Services ordered under MVP, refer to Section 19.3(E)(5).

7. Special Access Service (Cont'd)

7.4 Rate Regulations (Cont'd)

7.4.2 Types of Rates and Charges (Cont'd)

(C) Nonrecurring Charges[1] (Cont'd)

with an estimate of the design and installation charges involved based on the specific work to be performed. Such charges will be determined and billed to the customer as follows:

To calculate the labor charges, the Telephone Company will keep track of the labor hours used to meet the request of the customer and bill the customer at the applicable Additional Labor charges as set forth in Section 13.2.6 for engineering, and Section 13.1.1 for labor and testing.

An estimate of total charges will be provided to the customer, along with a request for authorization to incur the costs. Work will not proceed until authorization is received from the customer. Total charges will not exceed the estimate by more than 10 percent, nor will they exceed the standard nonrecurring charges which would otherwise apply.

(4) Installation of Optional Features and Functions

Nonrecurring charges apply for the installation of some of the optional features and functions available with Special Access Service. The charge applies whether the feature or function is installed coincident with the initial installation of service or at any time subsequent to the installation of the service.

The optional features for which nonrecurring charges apply are:

- Direct Analog Service[2] Data Capability
- Direct Analog Service[2] Improved Attenuation Distortion
- Direct Analog Service[2] Improved Envelope Delay Distortion
- Direct Analog Service[2] Telephoto Capability
- DS1 Clear Channel Capability

(D)
(D)

[1] For Services ordered under MVP, refer to Section 19.3(E)(5).

[2] Effective September 9, 2020, this Service will no longer be available for purchase by new or existing customers, and service agreements may no longer be renewed. In addition, requests to move, add or change existing service arrangements will not be accepted. Following the expiration of a customer's existing term agreement, service will be provided on a month-to-month basis at the applicable monthly extension rate until the service is discontinued. AT&T currently plans to discontinue this Service on or after June30, 2024,

(D)
(D)

ACCESS SERVICE

7. Special Access Service

7.4 Rate Regulations (Cont'd)

7.4.2 Types of Rates and Charges (Cont'd)

(C) Nonrecurring Charges[1] (Cont'd)

(5) Hub Rearrangements

(a) No Change in Point of Termination

A Hub Rearrangement occurs when an existing channelized Ameritech digital service between a customer premises and a facility hub is multiplexed onto a new higher speed Ameritech digital service at the hub. When this occurs, the facility records of the existing lower speed analog or digital services associated with the existing channelized Ameritech digital service must be changed to reflect the transport of these lower speed services at the new higher speed interface. A Hub Rearrangement applies only when the following conditions are met:

- neither customer location changes;
- the existing multiplexer associated with the lower speed services is not physically moved; and
- all rearranged facilities are included in one customer request

One nonrecurring Hub Rearrangement Record Charge, as set forth in 7.5.15 following, is applicable to each existing DS3 to DS1 or DS1 to Voice/Base Rate multiplexer that requires associated lower speed service facility record changes.

No Design and Central Office Connection or Customer Connection Charges apply to the multiplexed lower speed services which terminate at the hub. Absent a specific customer request, end-to-end testing will not be performed. If the customer requests end-to-end testing, a Customer Connection Charge will apply to each low speed circuit tested.

When cascading multiplexing is performed, whether in the same or a different hub, a charge for the rearrangement of services associated with the additional multiplexer also applies. For example, when a hub rearrangement occurs for services associated with a DS3 to DS1 multiplexer and the DS1 services from this multiplexer are also multiplexed to Direct Analog[2] services, one Hub Rearrangement Record Charge applies for the services rearranged on the DS3 to DS1 multiplexer and one for the services rearranged on each DS1 to Voice/Base Rate multiplexer. (N)

[1] For Services ordered under MVP, refer to Section 19.3(E)(5).

[2] Effective September 9, 2020, this Service will no longer be available for purchase by new or existing customers, and service agreements may no longer be renewed. In addition, requests to move, add or change existing service arrangements will not be accepted. Following the expiration of a customer's existing term agreement, service will be provided on a month-to-month basis at the applicable monthly extension rates until the service is discontinued. AT&T currently plans to discontinue this Service on or after June 30, 2024. (N) (N)

ACCESS SERVICE

7. Special Access Service

7.4 Rate Regulations (Cont'd)

7.4.2 Types of Rates and Charges (Cont'd)

(C) Nonrecurring Charges[1] (Cont'd) (N)

(5) Hub Rearrangements (Cont'd)

(a) No Change in Point of Termination (Cont'd)

Hub Rearrangement of lower speed services on a channelized DS1 service resulting from multiplexing the DS1 service onto a DS3 service with a DS3 to DS1 multiplexer is illustrated below:

Error! Objects cannot be created from editing field codes.
A - DS1 to Voice/Base Rate Multiplexer
B - DS3 to DS1 Multiplexer

In the preceding illustration, one Hub Rearrangement Record Charge applies for each of the two DS1 to Voice/Base Rate multiplexers which have lower speed services associated with them that are affected by the hub rearrangement. Rates and charges as specified in 7.5.9 and 7.5.15 following apply for installation of the DS3 service, the DS3 to DS1 multiplexer, and each DS1 service rearranged to terminate in DS3 to DS1 multiplexer. The Direct Analog Service[2] or the Base Rate Customer Connection Charge applies only to those specific Direct Analog or Base Rate Services for which the customer requests end-to-end testing.

[1] For Services ordered under MVP, refer to Section 19.3(E)(5). (N)

[2] Effective September 9, 2020, this Service will no longer be available for purchase by new or existing customers, and service agreements may no longer be renewed. In addition, requests to move, add or change existing service arrangements will not be accepted. Following the expiration of a customer's existing term agreement, service will be provided on a month-to-month basis at the applicable monthly extension rates until the service is discontinued. AT&T currently plans to discontinue this Service on or after June 30, 2024. (N) (N)

7. Special Access Service

7.4 Rate Regulations (Cont'd)

7.4.2 Types of Rates and Charges (Cont'd)

(C) Nonrecurring Charges[1] (Cont'd)

(5) Hub Rearrangements (Cont'd)

(b) High Speed Point of Termination Change

Hub Rearrangement will occur when an existing channelized Ameritech digital service is rearranged to an existing Ameritech digital service or Expanded Interconnection Service with a change in the high speed point of termination and where the location of the multiplexer and the configuration of lower speed services on the multiplexer are not affected.

Except as noted below, all facilities and equipment required for the activity must already exist:

- Rearranging an existing service from one multiplexer to another multiplexer.
- Rearranging an existing lower speed service to an existing multiplexed higher speed service.
- Rearranging from Special Access Service to/or from Expanded Interconnection Service.

No Design and Central Office Connection or Customer Connection charges will apply to the multiplexed lower speed services of the service being rolled over as long as there is no physical change to the lower speed services. However, a Hub Rearrangement record change charge as set forth in 7.5.15 following, will apply for each multiplexer that requires associated lower speed service facility record changes. If the customer requests end-to-end testing, a Customer Connection Charge will apply to each low speed service tested.

When cascading multiplexing is performed, whether in the same or a different hub, a charge for the rearrangement of services associated with the additional multiplexer also applies. For example, when a hub rearrangement occurs for services associated with a DS3 to DS1 multiplexer and the DS1 services from this multiplexer are also multiplexed to Direct Analog[2] services, one Hub Rearrangement Record Charge applies for the services rearranged on the DS3 to DS1 multiplexer and one for the services rearranged on each DS1 to Voice/ Base Rate multiplexer. (N)

[1] For Services ordered under MVP, refer to Section 19.3(E)(5).

[2] Effective September 9, 2020, this Service will no longer be available for purchase by new or existing customers, and service agreements may no longer be renewed. In addition, requests to move, add or change existing service arrangements will not be accepted. Following the expiration of a customer's existing term agreement, service will be provided on a month-to-month basis at the applicable monthly extension rates until the service is discontinued. AT&T currently plans to discontinue this Service on or after June 30, 2024. (N) (N)

7. Special Access Service (Cont'd)

7.4 Rate Regulations (Cont'd)

7.4.2 Types of Rates and Charges (Cont'd)

(C) Nonrecurring Charges/1/ (Cont'd)

(6) Service Rearrangements

Service rearrangements are changes to existing (installed) services which do not result in either a change in the minimum period requirements as set forth in 5.2.5 preceding or a change in the physical location of the point of termination at a customer or customer's end user premises. Changes which result in the establishment of new minimum period obligations are treated as disconnects and starts.

Changes in the physical location of the point of the termination are treated as moves and are described and charged for as set forth in 7.4.6 following.

The charge to the customer for the service rearrangement is dependent on whether the change is "records only" in nature or involves actual physical change to the service.

Certain "records only" changes will be made without charge(s) to the customer. Such changes require the continued provision and billing of the Access Service to the same entity (i.e., customer remains responsible for all outstanding indebtedness for the Access Service). Following are examples of "records only" changes:

/1/ For Services ordered under MVP, refer to Section 19.3(E)(5).

ACCESS SERVICE

7. Special Access Service (Cont'd)

7.4 Rate Regulations (Cont'd)

7.4.2 Types of Rates and Charges (Cont'd)

(C) Nonrecurring Charges/1/ (Cont'd)

(6) Service Rearrangements (Cont'd)

- Change of Customer name (i.e., the Customer of record does not change but rather the Customer of record changes its name -- e.g., AT&T Long Lines to AT&T - Communications),

- Change of Customer premises or Customer's end user premises address when the change of address does not require a physical relocation of equipment,

- Change in billing data (name, address, or contact name or telephone number or Optional Payment Plan information),

- Change of Customer or Customer's end user contact name or telephone number.

All other service rearrangements will be charged for as follows:

- If a change involves a change of the Customer of record (i.e., Access Service is provided and billed to a different entity) and no physical relocation or rearrangement of the service is required, the Administrative Charge will apply. For the change of Customer of record to be treated as a service rearrangement, the new Customer must assume liability for both current and prior charges for the service.

- If the change involves the addition of one or more legs to an existing multipoint service, one Design and Central Office Connection Charge associated with the Special Access Service will apply, regardless of the number of legs added. One Customer Connection Charge will apply only for each leg that is being added. One Administrative Charge will also apply.

/1/ For Services ordered under MVP, refer to Section 19.3(E)(5).

ACCESS SERVICE

7. Special Access Service (Cont'd)

7.4 Rate Regulations (Cont'd)
7.4.2 Types of Rates and Charges (Cont'd)

(C) Nonrecurring Charges[1] (Cont'd)

(6) Service Rearrangements (Cont'd)

- If a change involves the addition of Optional Features and Functions with separate nonrecurring charges for any service except DS3 Service, the Design and Central Office Connection Charge and the Customer Connection Charge associated with the Special Access Service will apply in addition to the separate nonrecurring charge. The Administrative Charge will also apply.

- If a change involves the Optional Fiber Hub Cross-connection Service for DS3, DS1 or DS0 (Base Rate and Direct Analog[2]) service, the Administrative Charge will apply in addition to the separate nonrecurring charge. No other nonrecurring charges will apply. (N)

- If a change involves the addition of Optional Features and Functions without separate nonrecurring charges for any service except DS3 Service, the Design and Central Office Connection Charge and the Customer Connection Charge associated with the Special Access Service will apply. The Administrative Charge will also apply. This includes, but is not limited to, the inclusion of existing DS3, DS1, and Base Rate Services in the customer's Network Reconfiguration Service (NRS) database.

- If a change involves the removal of Optional Features and Functions, either with or without separate nonrecurring charges, the Design and Central Office Charge and the Administrative Charge associated with the Special Access Service will apply.

- If a change involves the rearrangement of an existing point-to-point DS1 or DS3 service onto a higher speed digital service at a facility hub, or cross-connection to an interconnection arrangement in the same central office via Electronic Cross-Connection Service described in Section 17.4, following, the Administrative Charge and the Design and Central Office Connection Charge will apply. If a customer specifically requests end-to-end testing, then a Customer Connection Charge will also apply.

- If a change involves the rearrangement of an OCN Point-Point Service from point-to-point (non-channelized) service to an arrangement with an add/drop multiplexer and an Add/Drop function or vice-versa, an Administrative Charge, Design and Central Office Connection Charge and Customer Connection Charge will apply.

(1) For Services ordered under MVP, refer to Section 19.3(E)(5).

(2) Effective September 9, 2020, this Service will no longer be available for purchase by new or existing customers, and service agreements may no longer be renewed. In addition, requests to move, add or change existing service arrangements will not be accepted. Following the expiration of a customer's existing term agreement, service will be provided on a month-to-month basis at the applicable monthly extension rates until the service is discontinued. AT&T currently plans to discontinue this Service on or after June 30, 2024. (N) (N)

ACCESS SERVICE

7. Special Access Service (Cont'd)

7.4 Rate Regulations (Cont'd)

7.4.2 Types of Rates and Charges (Cont'd)

(C) Nonrecurring Charges/1/ (Cont'd)

(6) Service Rearrangements (Cont'd)

- If a change is made in payload mapping within an OCN Point-to-Point Service/2/ package, this change will require a redesign of the OCN Point-to-Point, and an Administrative Charge and Design and Central Office Connection Charge will apply.

- If a change is made in payload mapping within an OC-3, OC-12 or OC-48 Dedicated Ring service/2//4/, an Administrative Charge and Design and Central Office Connection Charge will apply. (C)

- If the change involves a change in the type of signaling on a Direct Analog/3/ Service, the Design and Central Office Connection Charge and the Customer Connection Charge associated with Direct Analog/3/ Service will apply. The Customer Connection Charge will apply per LDC affected. The Administrative Charge will also apply.

- If the Priority Restoration (PR) Level is changed on a Telecommunications Service Priority System service, the PR Level Change Charge will apply. The Administrative Charge will also apply.

- If a change involves the option Multiplexer Cross-Connection Service for DS1 and DS3 Service, the Administrative Charge will apply in addition to the Design and Central Office Connection Charge. No other nonrecurring charges will apply.

/1/ For Services ordered under MVP, refer to Section 19.3(E)(5).

/2/ Effective on August 21, 2018, AT&T will no longer offer term plans longer than 36 months, including any renewals, extensions or conversions of existing term commitments.

/3/ Effective September 9, 2020, this Service will no longer be available for purchase by new or existing customers, and service agreements may no longer be renewed. In addition, requests to move, add or change existing service arrangements will not be accepted. Following the expiration of a customer's existing term agreement, service will be provided on a month-to-month basis at the applicable monthly extension rates until the service is discontinued. AT&T currently plans to discontinue this Service on or after June 30, 2024.

/4/ Effective on or after December 1, 2021, neither new nor existing customers will be permitted to purchase new OC3, OC12, OC48 and OC192 Dedicated Ring Service (Service). In addition, (A) Service Payment Plans greater than 12-months in length will no longer be available; and (B) requests to move, add, change, upgrade, or downgrade existing Service arrangements will not be accepted, with the following exceptions: (1) existing customers will be permitted to modify their existing Service and will be able to add new circuits to their existing Service, but will not be permitted to add new nodes in any locations; and (2) any such new circuits will be subject to the customer's existing term payment plan or term agreement for the Service to which they are added. Following the expiration of a customer's existing term agreement, Service will be provided on a month-to-month basis at the applicable Monthly rates until the Service is discontinued. (N)
Effective November 30, 2023, unless specified to the contrary in their existing Service agreements, existing customers may not renew Term Payment Plans or term agreements for Service. In addition, no move, add, or change orders of any type will be accepted. (N)

ACCESS SERVICE

7. Special Access Service (Cont'd)

7.4 Rate Regulations (Cont'd)

7.4.2 Types of Rates and Charges (Cont'd)

(C) Nonrecurring Charges/1/ (Cont'd)

(6) Service Rearrangements (Cont'd)

- For changes made to a DS3 Service Package with an Optical Interface, nonrecurring charges will apply as follows:

	Number of Charges		
Description	Administrative	Design / Central Office	Customer Connections
(a) Connect 14 new DS3 SCs in two New DS3012 Service Packages			
- same serving wire center	1	7	14
- different serving wire centers, (with Channel Mileage	1	7	14

/1/ For Services ordered under MVP, refer to Section 19.3(E)(5).

7. Special Access Service (Cont'd)

7.4 Rate Regulations (Cont'd)

7. Special Access Service (Cont'd)

7.4 Rate Regulations (Cont'd)

7.4.2 Types of Rates and Charges (Cont'd)

(C) Nonrecurring Charges/1/ (Cont'd)

(6) Service Rearrangements (Cont'd)

(b) DS3 Service Package with an Optical Interface Upgrade

The following examples illustrate the applicable nonrecurring charges, assuming each SC in the new package is connected to another SC (typical point to point connection).

	Number of Charges		
Description	Administrative	Design / Central Office	Customer Connections
To DS3024 from DS3012			
- no premises-to-premises test	1	12	24
- with premises –to-premises test	1	12	48

/1/ For Services ordered under MVP, refer to Section 19.3(E)(5).

7. Special Access Service (Cont'd)

7.4 Rate Regulations (Cont'd)

ACCESS SERVICE

7. Special Access Service (Cont'd)

7.4 Rate Regulations (Cont'd)

7.4.2 Types of Rates and Charges (Cont'd)

(C) Nonrecurring Charges/1/ (Cont'd)

(6) Service Rearrangements (Cont'd)

- For all other changes which require physical work to be performed, one Design and Central Office Connection Charge and one Customer Connection Charge per LDC will apply. The Administrative Charge will also apply.

- For all other changes not requiring physical work at the central office or customer premises, including a change in the customer assigned circuit identification, billing account number (when initiated by the customer),jurisdiction without a physical rearrangement of facilities, or customer assigned test line number, the Administrative Charge will apply.

  Only one such charge will apply per order. If the rearrangements are initiated by the Telephone Company, or if the rearrangements are necessary to conform Telephone Company records to MECAB or MECOD requirements for jointly provided services, no charge will apply.

/1/ For Services ordered under MVP, refer to Section 19.3(E)(5).

7. Special Access Service

7.4 Rate Regulations (Cont'd)

7.4.2 Types of Rates and Charges (Cont'd)

(C) Nonrecurring Charges/1/ (Cont'd)

(7) DS3 Service

(a) DS3 Service Packages with an Optical Interface

Nonrecurring charges as specified in Section 7.5.15, following, apply for the installation of DS3 Service Channels with an Optical Interface. One Administrative Charge, per customer order, applies to all package sizes. The Design and Central Office Connection Charge is applied per circuit and does not apply to Fiber Hub Service Channels not connected to any other components. One Customer Connection Charge is applied to each Service Channel activated.

The following examples depict the applicable nonrecurring charges for the installation of two identical new DS3 Service Packages with an Optical Interface service channels configured as premises-to-premises circuits between the same two points at the time of installation, assuming each SC in the package is connected.

Error! Objects cannot be created from editing field codes.

Pacakge at Customer Premises A	Package at Customer Premises B	Administrative	Design / Central Office	Customer Connections
DS3012 (12 SCs)	DS3012	1	12	24
DS3024 (24 SCs)	DS3024	1	24	48

/1/ For Services ordered under MVP, refer to Section 19.3(E)(5).

7. Special Access Service (Cont'd)

7.4 Rate Regulations (Cont'd)

7.4.2 Types of Rates and Charges (Cont'd)

(C) Nonrecurring Charges/1/ (Cont'd)

(7) DS3 Service (Cont'd)

(a) DS3 Service Packages with an Optical Interface (Cont'd)

DS3 Service Package Installation

The following examples depict the applicable nonrecurring charges for the installation of new DS3 Service Packages, which terminate into a Fiber Hub office and all but one of the Service Channels are cross-connected.

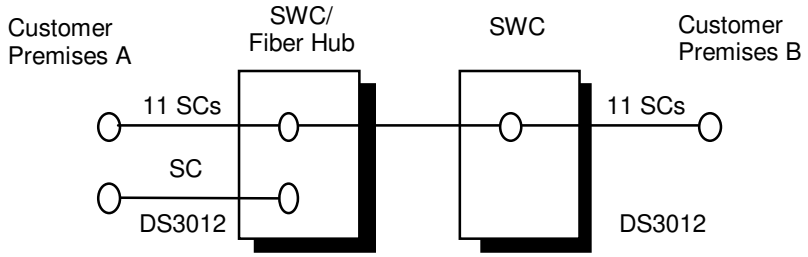

Package at Customer Premises A	Package at Customer Premises B	Administrative	Design / Central Office	Customer Connections
DS3012 (12 SCs)	DS3012	2	11	23

/1/ For Services ordered under MVP, refer to Section 19.3(E)(5).

7. Special Access Service (Cont'd)

7.4 Rate Regulations (Cont'd)

7.4.2 Types of Rates and Charges (Cont'd)

(C) Nonrecurring Charges/1/ (Cont'd)

(7) DS3 Service (Cont'd)

(a) DS3 Service Packages with an Optical Interface (Cont'd)

DS3 Service Package Installation (Cont'd)

The following illustration depicts the connection of 1 DS3 SC within a DS3012 Service Package to a DS3 LDC with an Electrical Interface (EI) and the applicable nonrecurring charges incurred. Because the DS3 Service Package serving premises A and the DS3 LDC with EI serving premises B are of different sizes, separate orders are required to install the service between the two premises. The SCs in the DS3012 package not interconnected to the DS3 LDC with an EI, if ordered, are required to be interconnected to other components (i.e., channel mileage termination or multiplexing when activated).

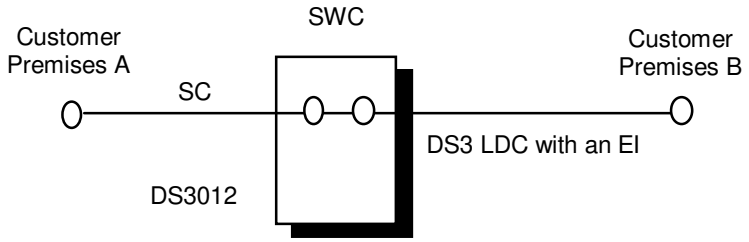

Applicable nonrecurring charges are:

1 Administrative Charge

1 Design and Central Office Charges (1 per circuit)

2 Customer Connection Charges
(1 for the DS3012 at Premises A and 1 for the DS3 with an EI at Premises B)

/1/ For Services ordered under MVP, refer to Section 19.3(E)(5).

7. Special Access Service (Cont'd)

7.4 Rate Regulations (Cont'd)

7.4.2 Types of Rates and Charges (Cont'd)

(C) Nonrecurring Charges/1/ (Cont'd)

(7) DS3 Service (Cont'd)

(a) DS3 Service Packages with an Optical Interface (Cont'd)

DS3 Service Package Installation (Cont'd)

The following illustration depicts the connection of 2 DS3 Service Channels with channel mileage and applicable nonrecurring charges associated with this point-to-point circuit.

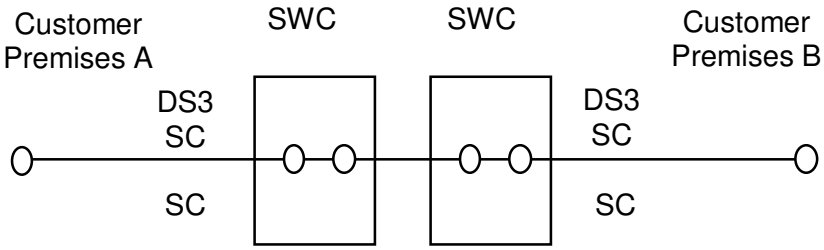

Applicable nonrecurring charges are:

1 - Administrative Charges

1 - Design and Central Office Connection Charge

2 - Customer Connection Charges
(1 per SC)

/1/ For Services ordered under MVP, refer to Section 19.3(E)(5).

7. Special Access Service (Cont'd)

7.4 Rate Regulations (Cont'd)

7.4.2 Types of Rates and Charges (Cont'd)

(C) Nonrecurring Charges/1/ (Cont'd)

(7) DS3 Service (Cont'd)

(a) DS3 Service Packages with an Optical Interface (Cont'd)

DS3 Service Package Installation (Cont'd)

The following illustration depicts the connections of 2 DS3 SCs within 2 DS3012 service packages and applicable nonrecurring charges associated with 2 point-to-point service channels and one channel connected to a multiplexer.

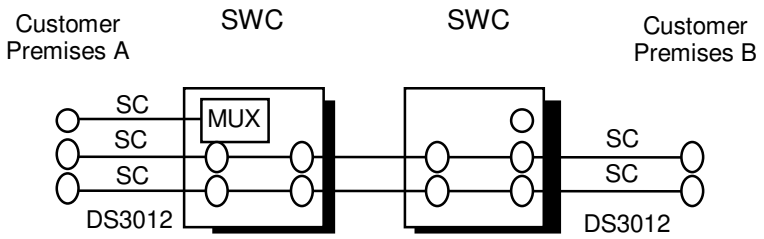

Applicable nonrecurring charges are:

2 - Administrative Charges (1 per request)

3 - Design and Central Office Connection Charges (1 per circuit)

5 - Customer Connection Charges (1 per SC)

/1/ For Services ordered under MVP, refer to Section 19.3(E)(5).

7. Special Access Service (Cont'd)

7.4 Rate Regulations (Cont'd)

7.4.2 Types of Rates and Charges (Cont'd)

(C) Nonrecurring Charges/1/ (Cont'd)

(7) DS3 Service (Cont'd)

(a) DS3 Service Packages with an Optical Interface (Cont'd)

DS3 Service Package Installation (Cont'd)

The following illustration depicts the connections of a DS3 LDC with an Elecrical Inteface (EI) point-to-point to a Service Channel of a DS3012 Service Package. The DS3012 Service Package is configured with 1 point-to-point Service Channel and 1 multiplexed Service Channel. Applicable nonrecurring charges will apply as listed.

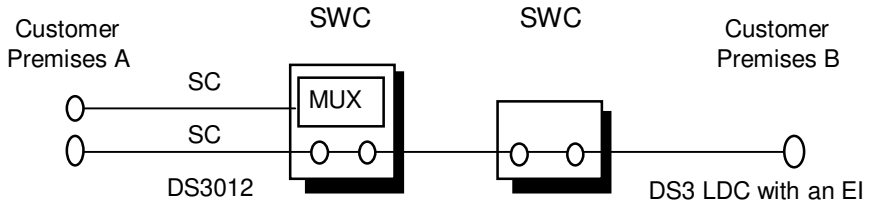

Applicable nonrecurring charges are:

2 - Administrative Charges (Per request, related orders)

2 - Design and Central Office Connection Charges (Per DS3 Circuit)

3 - Customer Connection Charges (1 each per SC and 1 per DS3 LDC with an EI)

/1/ For Services ordered under MVP, refer to Section 19.3(E)(5).

7. Special Access Service (Cont'd)

7.4 Rate Regulations (Cont'd)

7.4.2 Types of Rates and Charges (Cont'd)

(C) Nonrecurring Charges/1/ (Cont'd)

(7) DS3 Service (Cont'd)

(a) DS3 Service Packages with an Optical Interface (Cont'd)

DS3 Service Package Installation (Cont'd)

The following illustration depicts the connection of 3 DS3 Service Channels within a DS3012 service package, 2 Service Channels are connected to multiplexing in SWC A, and 1 Service Channel is connected to Channel Mileage Termination and to subsequent multiplexing in SWC B, assuming that all Service Channels are ordered at the same time. Nonrecurring charges apply as listed.

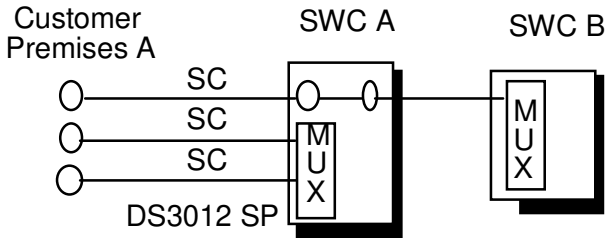

Applicable nonrecurring charges are:

2 - Administrative Charges

3 - Design and Central Office Connection Charges (Per DS3 Circuit)

3 - Customer Connection Charges (Per SC)

/1/ For Services ordered under MVP, refer to Section 19.3(E)(5).

7. Special Access Service (Cont'd)

7.4 Rate Regulations (Cont'd)

7.4.2 Types of Rates and Charges (Cont'd)

(C) Nonrecurring Charges/1/ (Cont'd)

(7) DS3 Service (Cont'd)

(a) DS3 Service Packages with an Optical Interface (Cont'd)

Nonrecurring charges are not applicable to the DS3 Service Package element.

(b) DS3 Service Package with an Optical Interface Upgrades and Downgrades

Customers have the option to upgrade their DS3 Service package sizes as their needs change. Termination Liability charges will not apply for service package upgrades.

/1/ For Services ordered under MVP, refer to Section 19.3(E)(5).

7. Special Access Service (Cont'd)

7.4 Rate Regulations (Cont'd)

7.4.2 Types of Rates and Charges (Cont'd)

(C) Nonrecurring Charges/1/ (Cont'd)

(7) DS3 Service (Cont'd)

(b) DS3 Service Package with an Optical Interface Upgrades and Downgrades (Cont'd)

The following illustration depicts two available options and applicable nonrecurring charges when a customer with existing DS3 Service Channels within a DS3012 package between Customer Premises A and B requires twelve new DS3 Service Channels within a DS3012 package between Customer Premises A and C.
In the first option, the customer retains the original DS3012 Package and adds a second DS3012 at Customer Premises A, and a new DS3012 at Customer Premises C. For clarity, assume existing DS3 packages are fully configured.

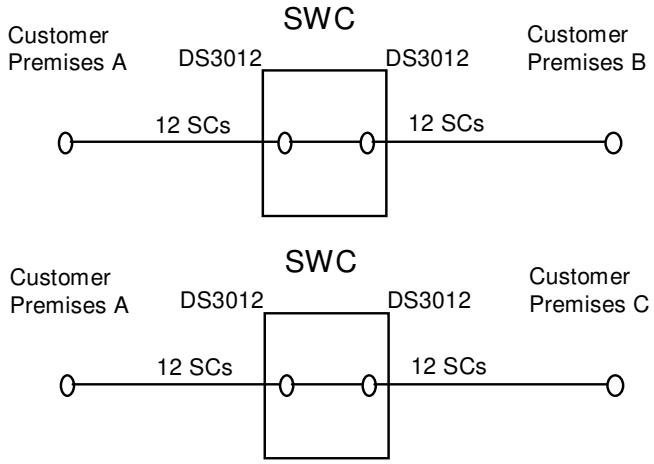

Applicable nonrecurring charges are:

1 - Administrative Charge

12 - Design and Central Office Connection Charges
(one for each premises-to-premises DS3 Service Channel)

24 - Customer Connection Charges
(one for each new DS3 Service Channel connected)

/1/ For Services ordered under MVP, refer to Section 19.3(E)(5).

7. Special Access Service (Cont'd)

7.4 Rate Regulations (Cont'd)

7.4.2 Types of Rates and Charges (Cont'd)

(C) Nonrecurring Charges/1/ (Cont'd)

(7) DS3 Service (Cont'd)

(b) DS3 Service Package with an Optical Interface Upgrades and Downgrades (Cont'd)

In the second option, the customer disconnects the existing DS012 Package at Customer Premises A and installs a DS3024 Package at Customer Premises A connecting the Service Channels within the existing DS3012 at Customer Premises B and installs a new DS3012 at Customer Premise C.

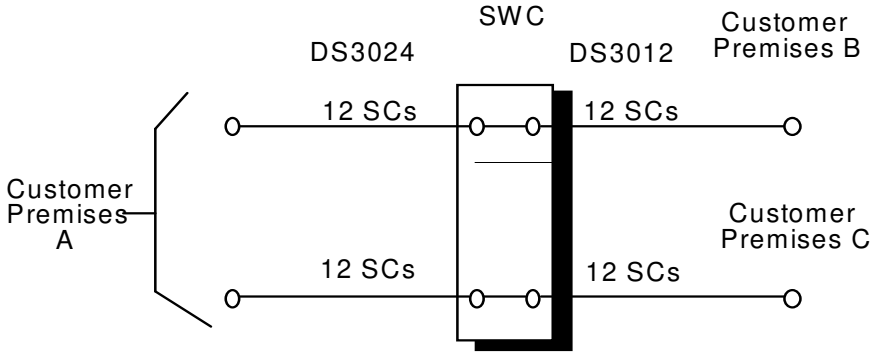

Applicable nonrecurring charges are:

1 - Administrative Charge

12 - Design and Central Office Connection Charges
(one for each premises-to-premises SC installed)

24 - Customer Connection Charges
(one for each newly installed SC)

Premises-to-premises testing would be done on services between Customer Premises A and C, but not on the services between Customer Premises A and B. If the customer requests premises-to-premises testing between A and B, twelve additional Customer Connection Charges would apply.

/1/ For Services ordered under MVP, refer to Section 19.3(E)(5).

7. Special Access Service (Cont'd)

7.4 Rate Regulations (Cont'd)

7.4.2 Types of Rates and Charges (Cont'd)

(C) Nonrecurring Charges/1/ (Cont'd)

(7) DS3 Service (Cont'd)

(c) Limitations

All nonrecurring charges (Administrative, Design and C.O., and Customer Connection) for DS3 Service with an Optical Interface will be applied to the DS3 Service Channel (SC) rate element.

Customers, in service as of August 4, 1992, who have already paid a Customer Connection Charge on a Service Channel which is not in service, will not pay an additional Customer Connection Charge when the Service Channel is placed in service.

(8) OC-3, OC-12 and OC-48 Dedicated Ring/2/ (C)

ll nonrecurring charges for the initial installation of the Dedicated Ring will be included in the monthly rates, except for the actual ring design for which an Administrative Charge and Design and Central Office Connection Charge will be applied once for the entire ring (circuit).

/1/ For Services ordered under MVP, refer to Section 19.3(E)(5).

/2/ Effective on or after December 1, 2021, neither new nor existing customers will be permitted to purchase new OC3, OC12, OC48 and OC192 Dedicated Ring Service (Service). In addition, (A) Service Payment Plans greater than 12-months in length will no longer be available; and (B) requests to move, add, change, upgrade, or downgrade existing Service arrangements will not be accepted, with the following exceptions: (1) existing customers will be permitted to modify their existing Service and will be able to add new circuits to their existing Service, but will not be permitted to add new nodes in any locations; and (2) any such new circuits will be subject to the customer's existing term payment plan or term agreement for the Service to which they are added. Following the expiration of a customer's existing term agreement, Service will be provided on a month-to-month basis at the applicable Monthly rates until the Service is discontinued. (N)
Effective November 30, 2023, unless specified to the contrary in their existing Service agreements, existing customers may not renew Term Payment Plans or term agreements for Service. In addition, no move, add, or change orders of any type will be accepted. (N)

7. Special Access Service (Cont'd)

7.4 Rate Regulations (Cont'd)

7.4.3 Surcharge for Special Access Service *

(A) General

In addition to the rates and charges described in 7.4.2 preceding, there is a monthly surcharge that applies to Special Access Service. The Special Access Surcharge compensates the Telephone Company for use of the local exchange network when Special Access Service is connected to a PBX or equivalent device which is capable of interconnecting the Special Access Service with local exchange service.

The Telephone Company will automatically bill the surcharge on each Special Access Service installed irrespective of whether the interconnection capability exists in the customer's premises equipment or in a Centrex-CO type switch unless written certification is received from the customer certifying exemption status as set forth in (B) following.

Upon the effective date of the application of the Special Access Surcharge to Dedicated Access Lines[(1)], the Telephone Company will begin to bill the surcharge (N)
for Dedicated Access Lines[(1)] ordered as of that date unless exemption certification (N)
has been received. Billing of the surcharge for Dedicated Access Lines[(1)] in service (N)
or on order prior to the effective date for Dedicated Access lines[(1)] will be deferred (N)
for a period of 90 days.

(B) Special Access Surcharge Exemptions

The Special Access Service will be exempted from the surcharge if the customer provides the Telephone Company written certification that the Special Access Service termination is one of the following;

(1) an open-end termination in a Telephone Company switch of an FX line, including CCSA and CCSA-equivalent ONALS; or

(2) an analog Local Distribution Channel that is used for radio or television program transmission; or

(3) a termination used for TELEX service; or

(4) a termination that by the nature of its operating characteristics could not make use of Telephone Company common lines; or

* Discontinued for services rendered on and after January 1, 1990.

(1) Effective September 9, 2020, this Service will no longer be available for purchase by new or existing customers, (N)
and service agreements may no longer be renewed. In addition, requests to move, add or change existing
service arrangements will not be accepted. Following the expiration of a customer's existing term agreement,
service will be provided on a month-to-month basis at the applicable monthly extension rates until the service is
discontinued. AT&T currently plans to discontinue this Service on or after June 30, 2024. (N)

7. Special Access Service (Cont'd)

7.4 Rate Regulations (Cont'd)

7.4.3 Surcharge for Special Access Service (Cont'd) *

(B) Special Access Surcharge Exemptions (Cont'd)

(5) a termination that interconnects either directly or indirectly to the local exchange network where the usage is subject to Carrier Common Line charges such as, where the Special Access Service accesses only FGA and no local exchange lines, or Special Access Service between customer points of termination or Special Access Service connecting CCSA or CCSA-type equipment (inter-machine trunks); or

(6) a termination that the customer certifies to the Telephone Company is not connected to a PBX or other device capable of interconnecting the special access facility to a local exchange subscriber line.

(7) During the period commencing June 1, 1986 and ending December 31, 1986 the Special Access Surcharge shall not apply to Dedicated Access Lines[(1)] associated with resold WATS and/or WATS-type service where such lines were in service on March 13, 1986. (N)

(C) Exemption Certification

(1) Special Access Services which are terminated as set forth in (B) preceding will be exempted from the Special Access Surcharge if the customer provides the Telephone Company with a written notification certifying exemption. Such notification shall be provided by the customer (1) at the time the Special Access Service is ordered or installed; (2) at such time as the Special Access Service is reterminated to a device not capable of interconnecting to the local exchange network, or (3) at such time as the Special Access Service becomes associated with a Switched Access Service that is subject to Carrier Common Line charges.

(2) If written certification is not received at the time the Special Access Service is obtained, the surcharge will be applied. Exempt status will become effective on the certification date indicated by the customer, subject to the regulations in (D) following.

* Discontinued for services rendered on and after January 1, 1990.

(1) Effective September 9, 2020, this Service will no longer be available for purchase by new or existing customers, and service agreements may no longer be renewed. In addition, requests to move, add or change existing service arrangements will not be accepted. Following the expiration of a customer's existing term agreement, service will be provided on a month-to-month basis at the applicable monthly extension rates until the service is discontinued. AT&T currently plans to discontinue this Service on or after June 30, 2024. (N)

ACCESS SERVICE

7. Special Access Service

7.4 Rate Regulations (Cont'd)

7.4.3 Surcharge for Special Access Service (Cont'd) *

(C) Exemption Certification (Cont'd)

(3) The exemption certification is to be provided by the customer or authorized representative and include the category of exemption, as set forth in (B) preceding, for each termination, and the date which the exemption is effective.

(4) The customer shall also notify the Telephone Company when an exempted Special Access Service is changed or reterminated such that the exemption is no longer applicable.

(D) Crediting the Surcharge

The Telephone Company will cease billing the Special Access Surcharge when certification that the Special Access Service has become exempt from the surcharge, as set forth in (B) preceding is received. If the status of the Special Access Service was changed prior to receipt for the exemption certification, the Telephone Company will credit the customer's account, not to exceed ninety (90) days, based on the effective date of the change specified by the customer in the letter of certification.

(E) Application of Rates

(1) The monthly Special Access Surcharge applies to Special Access Services arranged, as set forth in (A) preceding, on a per voice grade equivalent basis as shown in the following example.

Special Access Service	Voice Grade Equivalent	Surcharge	Monthly Charge
Direct Analog Service[1]	1	$25.00	$ 25.00 (N)
DS1	24	25.00	600.00
1.544 Mbps	2	25.00	50.00
128.0 Kbps	4	25.00	100.00
256.0 Kbps	6	25.00	150.00
384.0 Kbps			
DS3	672	25.00	16,800.00

* Discontinued for services rendered on and after January 1, 1990.

[1] Effective September 9, 2020, this Service will no longer be available for purchase by new or existing customers, and service agreements may no longer be renewed. In addition, requests to move, add or change existing service arrangements will not be accepted. Following the expiration of a customer's existing term agreement, service will be provided on a month-to-month basis at the applicable monthly extension rates until the service is discontinued. AT&T currently plans to discontinue this Service on or after June 30, 2024. (N)

7. Special Access Service (cont'd)

7.4 Rate Regulations (cont'd)

7.4.3 Surcharge for Special Access Service (cont'd)

(E) Application of Rates (cont'd)

(2) In the case of multipoint Special Access Service, one Special Access Surcharge will apply for each termination at a customer designated premises except that no surcharge applies at the customer designated premises at which the Access Service is connected to Interstate Service.

(3) The Telephone Company will bill the surcharge to the customer who orders the Special Access Service unless the Service is exempt as set forth in (B) preceding.

7.4.4 Message Station Equipment Recovery Charge

The Message Station Equipment Recovery Charge is a charge to recover that portion of message station equipment that is assigned to Special Access Service.

Pursuant to CC Docket 83-1145 Memorandum Opinion and Order adopted by the Federal Communications Commission on November 8, 1984, and released on November 9, 1984, this charge is assessed only to those customers to which the Special Access Surcharge applies. The rate for the Message Station Equipment Recovery Charge is set forth in 7.5.14 following.

7. Special Access Service (Cont'd)

7.4 Rate Regulations (cont'd)

7.4.5 Minimum Periods

The minimum service period for all services is one month, except as follows:

(A) The minimum service period for part-time and occasional Video services is one day (i.e., a continuous 24 hour period, not limited to a calendar day).

(B) The minimum period for service provided on an Individual Case Basis (ICB) is as specified in the ICB filing.

(C) The minimum service period for a DS3 LDC with an Electrical Interface and a DS3 Service Package with an Optical Interface is 12 months[4]. After the minimum period is satisfied, the monthly extension rate will apply. (C)

(D) The minimum service period for Ameritech OC-3 and Ameritech OC-12 Services is 12 months. After the minimum period is satisfied, the monthly rate will apply unless an OPP is selected.

(E) The minimum service period for Ameritech OC-3 Dedicated Ring[2][3] and Ameritech OC-12 Dedicated Ring9[2][3] service is 36 months. After the minimum period is satisfied, the prevailing rates of the current plan will continue until the Customer cancels or renews the service.

(F) The minimum service period for SONET Xpress[1] is 12 months. After the minimum period is satisfied, the monthly extension rate will apply unless an OPP is selected.

(1) Effective April 24, 2012, SONET Xpress is available only to existing Customers, for existing service arrangements. Existing Customers may continue to receive service under existing service arrangements, or on a month-to-month basis after their existing service arrangements expire, until SONET Xpress is discontinued.

(2) Effective on August 21, 2018, AT&T will no longer offer term plans longer than 36 months, including any renewals, extensions or conversions of existing term commitments.

(3) Effective on or after December 1, 2021, neither new nor existing customers will be permitted to purchase new OC3, OC12, OC48 and OC192 Dedicated Ring Service (Service). In addition, (A) Service Payment Plans greater than 12-months in length will no longer be available; and (B) requests to move, add, change, upgrade, or downgrade existing Service arrangements will not be accepted, with the following exceptions: (1) existing customers will be permitted to modify their existing Service and will be able to add new circuits to their existing Service, but will not be permitted to add new nodes in any locations; and (2) any such new circuits will be subject to the customer's existing term payment plan or term agreement for the Service to which they are added. Following the expiration of a customer's existing term agreement, Service will be provided on a month-to-month basis at the applicable Monthly rates until the Service is discontinued.
Effective November 30, 2023, unless specified to the contrary in their existing Service agreements, existing customers may not renew Term Payment Plans or term agreements for Service. In addition, no move, add, or change orders of any type will be accepted.

(4) Effective January 17, 2024, the 12-month minimum period no longer applies. (N)

7. Special Access Service (Cont'd)

7.4 Rate Regulations (Cont'd)

7.4.6 Moves

A move involves a change in the physical location of one of the following:

- The Point of Termination at the customer's premises
- The customer's premises

The charges for the move are dependent on whether the move is to a new location within the same building or to a different building.

(A) Moves Within the Same Building

When the move is to a new location within the same building, the Administrative Charge and Customer Connection Charge for the service termination affected will apply. There will be no change in the minimum period requirements.

Material formerly appeared in ILL. C. C. No. 15, Section 7.4.6, Page 321.

7. Special Access Service (Cont'd)

7.4 Rate Regulations (Cont'd)

7.4.6 Moves (Cont'd)

(B) Moves To a Different Building

Moves to a different building will be treated as a discontinuance and start of service and all associated nonrecurring charges will apply. New minimum period requirements will be established for the new services. The customer will also remain responsible for satisfying all outstanding minimum period charges for the discontinued service.

7.4.7 Mileage Measurement

The mileage to be used to determine the monthly rate for the Channel Mileage is calculated on the airline distance between the locations involved, i.e., the serving wire centers associated with two customer designated premises, the serving wire center associated with a customer designated premises and an international boundary point, a serving wire center associated with a customer designated premises and a Telephone Company Hub, a serving wire center associated with a customer designated premises and a WATS Serving Office. The serving wire center associated with a customer designated premises is the serving wire center from which the customer designated premises would normally obtain dial tone.

The Vertical and Horizontal (V&H) coordinates method is used to determine mileage. This method is set forth in the National Exchange Carrier Association Tariff F.C.C. No. 4. When the calculation results in a fraction of a mile, always round up to the next whole mile before applying the rate.

When Hubs are involved, mileage is computed and rates applied separately for each section of the Channel Mileage, i.e., customer designated premises serving wire center to Hub, Hub to Hub and/or Hub to customer designated premises serving wire center. However, when any service is routed through a Hub for purposes other than customer specified bridging or multiplexing (e.g., The Telephone Company chooses to so route for test access purposes), rates will be applied only to the distance calculated between the serving wire centers associated with the customer designated premises.

When the mileage measurement is to an international boundary point, one Channel Mileage Termination charge applies in addition to the per mile rate (Use USOC 1LSBX in lieu of 1L5xx).

Material formerly appeared in ILL. C. C. No. 15, Section 7.4.6, Pages 321 and 322. Material changed per Transmittal No. 369.

7. Special Access Service (Cont'd)

7.4 Rate Regulations (Cont'd)

7.4.7 Mileage Measurement (Cont'd)

In the event that a WATS serving office lacks sufficient capacity for the additional traffic carried by the DAL, the Telephone Company may extend the DAL[1] to another WATS serving office which has sufficient capacity for the additional traffic and channel mileage charges will not apply. If capacity becomes available later at the normal WATS serving office, the channel mileage charges will not apply. (N)

[1] Effective September 9, 2020, this Service will no longer be available for purchase by new or existing customers, and service agreements may no longer be renewed. In addition, requests to move, add or change existing service arrangements will not be accepted. Following the expiration of a customer's existing term agreement, service will be provided on a month-to-month basis at the applicable monthly extension rates until the service is discontinued. AT&T currently plans to discontinue this Service on or after June 30, 2024. (N)

7. Special Access Service (Cont'd)

7.4 Rate Regulations (Cont'd)

7.4.8 Facility Hubs

A customer has the option of ordering direct analog[1], DS1 or DS3 facilities (i.e., Group, Supergroup, Mastergroup, DS1 or DS3) to a facility Hub for channelizing to individual services requiring lower capacity facilities (e.g., Telegraph, Voice, etc.). (D)

Different locations may be designated as Hubs for different facility capacities, e.g., multiplexing from digital to digital may occur at one location while multiplexing from digital to analog may occur at a different location. Hub locations (Wire Centers) may be further designated as Intermediate and Terminus Hubs as set forth in Section 2.6 preceding. When ordering, the customer will specify the desired multiplexing Hub selected from the Exchange Carrier Association Tariff F.C.C. No. 4. This tariff identifies the type(s) of multiplexing functions which are available and the serving wire centers where they are available.

Some of the types of multiplexing available include the following:

- from higher to lower bit rate
- from higher to lower bandwidth
- from digital to voice frequency channels

End to end services may be provided on channels of these facilities to a Hub. The transmission performance for the end to end service provided between customer designated premises will be that of the lower capacity or bit rate. For example, when a 1.544 Mbps facility is multiplexed to voice frequency channels, the transmission performance of the channelized services will be Direct Analog Service[1], not DS1 Service.

[1] Effective September 9, 2020, this Service will no longer be available for purchase by new or existing customers, and service agreements may no longer be renewed. In addition, requests to move, add or change existing service arrangements will not be accepted. Following the expiration of a customer's existing term agreement, service will be provided on a month-to-month basis at the applicable monthly extension rates until the service is discontinued. AT&T currently plans to discontinue this Service on or after June 30, 2024.

ACCESS SERVICE

7. Special Access Service (Cont'd)

7.4 Rate Regulations (Cont'd)

7.4.8 Facility Hubs (Cont'd)

The Telephone Company will commence billing the monthly rate for the facility to the Hub on the date specified by the customer on the Access Order. Individual services utilizing these facilities may be installed coincident with the installation of the facility to the Hub, or may be ordered and/or installed at a later date, at the option of the customer. The customer will be billed for a Direct Analog Service[(1)], DS1 or DS3 Local Distribution Channel, Channel Mileage Terminations and Channel Mileage (when applicable), and the multiplexer at the time the facility is installed. Individual service rates (by service type) will apply for a Local Distribution Channel and additional Channel Mileage Terminations and Channel Mileage (as required) for each channelized service. These will be billed to the customer as each individual service is installed. (N)

(1) Effective September 9, 2020, this Service will no longer be available for purchase by new or existing customers, and service agreements may no longer be renewed. In addition, requests to move, add or change existing service arrangements will not be accepted. Following the expiration of a customer's existing term agreement, service will be provided on a month-to-month basis at the applicable monthly extension rates until the service is discontinued. AT&T currently plans to discontinue this Service on or after June 30, 2024. (N)

7. Special Access Service (Cont'd)

7.4 Rate Regulations (Cont'd)

7.4.8 Facility Hubs (Cont'd)

Cascading multiplexing occurs when an analog, DS1 or DS3 channel is de-multiplexed to provide channels with a lesser capacity and one of the lesser capacity channels is further de-multiplexed. For example, a Supergroup facility is de-multiplexed to five Group facilities and then one of the Group facilities is further de-multiplexed to individual voice grade channels.

When cascading multiplexing is performed, whether in the same or a different Hub, a charge for the additional multiplexing unit also applies. When cascading multiplexing is performed at different Hubbing locations, Channel Mileage Termination and Channel Mileage charges also apply between the Hubs.

Although not requiring multiplexing, the Telephone Company will designate certain Hubs for Video Services. A customer can order full-time and/or part-time services(s) (D)
between customer designated premises and a Hub and will be billed accordingly at the rates set forth in 7.5.4 or 7.5.5 following for a full-time or part-time service, as appropriate. At the request of a customer, the full-time and/or part-time services provided to the Hub may be connected together in the following configurations; full-time to full-time, full-time to part-time or part-time to part-time. The customer will be charged for each such connection made at the rates for Other Labor as set forth in 13.2.6(C) following. The rates that apply for the service between each customer designated premises and the Hub are a Local Distribution Channel and Channel Mileage Terminations and Channel Mileage, if applicable. (D)
(D)

(D)
(D)

7. Special Access Service (Cont'd)

7.4 Rate Regulations (Cont'd)

7.4.9 Shared Use Base Rate, DS1, DS3, OC-3, OC-12 and OC-48 Services

Shared use occurs when Special Access Service and Switched Access Service are provided over the same DS1 or DS3 facilities through a common interface. The facility will be ordered, provided and rated as Special Access Service (i.e., Local Distribution Channel, DS3 Service Packages, DS3 Service Channels, Channel Mileage Terminations and Channel Mileage, as appropriate, and Multiplexing). The nonrecurring charge that applies when the Shared Use Facility is installed will be the nonrecurring charge associated with the installation of the appropriate Special Access DS1 or DS3. The Special Access monthly rate will apply, regardless of whether any individual channels of the Shared Special Access facility are used for Special Access Service, Switched Access Service, or any other type of service. The practice known as "ratcheting" (to apply non-Special Access rates on a proportional basis) shall not apply in any circumstance. (C) (C)

7. Special Access Service (Cont'd)

7.4 Rate Regulations (Cont'd)

7.4.9 Shared Use Base Rate, DS1, DS3, OC-3, OC-12 and OC-48 Services (Cont'd)

(D)

(D)

7. Special Access Service
7.4 Rate Regulations (Cont'd)

7.4.10 Optional Payment Plan (OPP) for Base Rate, DS1[(5)(6)], DS3[(5)(6)], OC-3, OC-12, OC-48 Services, TV Analog Video Services[(4)], SONET Xpress Service[(2)], and Serial Component Video Service. (C)

(A) General

The Optional Payment Plan is a provision that allows a Customer to select Base Rate, DS1, DS3, TV Analog Video Service, Wideband Analog Video Service (WAVS), Serial Component Video Service (SVS), OC-3, OC-12, OC-48 Services (excluded DS1 - 128.0, 256.0 and 384.0 Kbps transport) and SONET Xpress Service, over a 12, 24, 36, 48 or 60-month payment period.[/3/] Monthly rates for services installed under this Payment Plan will change as Telephone Company initiated rate changes become effective but during the OPP term will not exceed the monthly rate in effect at the beginning of the Customer's OPP term.

During the term of the selected OPP, Telephone Company initiated rate changes (increases or decreases) will automatically be applied to the monthly payments for the remaining months of the current OPP term. But in no case will any rate change cause the monthly rate during the OPP term to exceed that in effect at the beginning of the Customer's OPP term.

TV Analog Video Service, Wideband Analog Video Service, and Serial Component Video Service, rates and charges for which the OPP is available are listed in Section 7.5.5 following. Base Rate, DS1, and DS3 Service rates and charges for which the OPP is available are listed in Section 7.5.9, OC-3, OC-12 and OC-48 service rates and charges for which OPP is available are listed in Section 7.5.10, and SONET Xpress Service rates and charges for which OPP is available are listed in Section 7.5.12 following.

Customers subscribing to the OPP will be subject to nonrecurring charges[/1/] as specified in Section 7.5.15 for installation and rearrangements of service covered by the plan. The nonrecurring charges will not be spread over the OPP term. If the Customer subscribes to the OPP on an existing service with no other changes, no nonrecurring charges will apply.

(1) For Services ordered under MVP, refer to Section 19.3(E)(5).
(2) Effective April 24, 2012, SONET Xpress is available only to existing Customers, for existing service arrangements. Existing Customers may continue to receive service under existing service arrangements, or on a month-to-month basis after their existing service arrangements expire, until SONET Xpress is discontinued.
(3) Effective on September 13, 2017, 48- and 60-month Optional Payment Plans for DS1 and DS3 Services are no longer available, and Optional Payment Plans for Base Rate services are no longer available, including for any otherwise available renewals or conversions. Circuits already subject to an Optional Payment Plan, as of September 13, 2017, will continue to be provided under the then-current Optional Payment Plan term for the remainder of that term.
(4) Effective December 31, 2020, this Service will no longer be available for purchase by new or existing customers, and service agreements may no longer be renewed. In addition, requests to move, add, or change existing service arrangements will not be accepted. Following the expiration of a customer's existing term agreement, service will be provided on a month-to-month basis at the applicable Monthly rate until the service is discontinued. AT&T currently plans to discontinue this Service on or after December 31, 2021.
(5) Effective November 1, 2022, DS1 and DS3 Optional Payment Plan Services, 24- and 36-month plans, and DS1 Discount Commitment Plan, 36-month plans (collectively, Term Plan Services), are no longer available, including conversions. Existing Term Plan Services, as of November 1, 2022, will continue to be provided under the then-current terms, for the remainder of the applicable term.
(6) Effective January 17, 2024, DS1 and DS3 Optional Payment Plan Services, 12-month plans (collectively, Term Plan Services) are no longer available, including conversions. Existing Term Plan Services on January 17, 2024, will continue to be provided for the remainder of the then-current terms. (N) | (N)

7. Special Access Service (Cont'd)

7.4 Rate Regulations (Cont'd)

7.4.10 Optional Payment Plan (OPP) for Base Rate, DS1, DS3, OC-3, OC-12, OC-48 Services, TV Analog Video Services/2/, SONET Express Services/1/, and Serial Component Video Service (Cont'd)

(A) General (Cont'd)

At the expiration of the OPP term and if the Customer wishes to continue Base Rate, DS1, DS3, TV Analog Video Service, ASVS, OC-3, OC-12, OC-48 or SONET Xpress Service/1/, the Customer may select a new OPP at the prevailing OPP rate. If a Customer does not wish to renew the OPP at the expiration of the term, the Customer's service will automatically convert to month-to-month or DS3, Dedicated Ring/3/ or SONET Xpress/1/ Monthly Extension rates. (C)

(B) Prepayment of an OPP

A Customer may, at any time during an OPP term, elect to prepay the remaining monthly charges for the rest of the term. The prepayment amount will be adjusted for the time value of money. Recurring charges will cease for the rest of the term and start up again at the end of the OPP if service has not been disconnected. If prepayment has been elected and the service is discontinued prior to the end of the OPP term, a credit for the unused portion of the OPP term, adjusted for the time value of money, will be given to the Customer. Termination charges will still be applicable. Once a Customer selects the prepayment option, the prepaid amount is not adjusted for company initiated rate changes that occur during the period for which the Customer has prepaid.

(C) OPP Termination Liabilities

Customers requesting termination of service prior to the expiration date of the OPP term will be liable for a termination charge. The termination charge for all OPP terms, except for Base Rate OPP terms subscribed to after October 13, 1997, DS1 and DS3 OPP terms subscribed to after February 20, 1997 and DS3 Service Packages with an Optical Interface (see Section 7.4.10 C(i)), will be calculated as follows:

The dollar difference between the current OPP rate for the OPP term that could have been completed during the time the service was actually in service, or the monthly rate for services in place less than 12 months, and the Customer's current OPP rate for each month the service was provided.

/1/ Effective April 24, 2012, SONET Xpress is available only to existing Customers, for existing service arrangements. Existing Customers may continue to receive service under existing service arrangements, or on a month-to-month basis after their existing service arrangements expire, until SONET Xpress is discontinued.

/2/ Effective December 31, 2020, this Service will no longer be available for purchase by new or existing customers, and service agreements may no longer be renewed. In addition, requests to move, add, or change existing service arrangements will not be accepted. Following the expiration of a customer's existing term agreement, service will be provided on a month-to-month basis at the applicable Monthly rate until the service is discontinued. AT&T currently plans to discontinue this Service on or after December 31, 2021.

/3/ Effective on or after December 1, 2021, neither new nor existing customers will be permitted to purchase new OC3, OC12, OC48 and OC192 Dedicated Ring Service (Service). In addition, (A) Service Payment Plans greater than 12-months in length will no longer be available; and (B) requests to move, add, change, upgrade, or downgrade existing Service arrangements will not be accepted, with the following exceptions: (1) existing customers will be permitted to modify their existing Service and will be able to add new circuits to their existing Service, but will not be permitted to add new nodes in any locations; and (2) any such new circuits will be subject to the customer's existing term payment plan or term agreement for the Service to which they are added. Following the expiration of a customer's existing term agreement, Service will be provided on a month-to-month basis at the applicable Monthly rates until the Service is discontinued. (N)
Effective November 30, 2023, unless specified to the contrary in their existing Service agreements, existing customers may not renew Term Payment Plans or term agreements for Service. In addition, no move, add, or change orders of any type will be accepted. (N)

7. Special Access Service (Cont'd)

7.4 Rate Regulations (Cont'd)

7.4.10 Optional Payment Plan (OPP) for Base Rate, DS1[3][4], DS3[3][4], OC-3, OC-12, OC-48 Services, TV Analog Video Services[2], SONET Express Services[1], and Serial Component Video Service (Cont'd) (C)

(C) OPP Termination Liabilities (Cont'd)

For example, a Customer subscribed to a 60 month OPP term and disconnected service during the 37th month. This Customer's termination charge would be:

[36 month OPP Rate - 60 month OPP rate] x 37 = Termination Charge.

The 36 month OPP term could have been completed during the months the service was actually in service.

All recurring rate termination charges will be based on the recurring OPP rates in effect at the time of termination.

Termination Liability charges for all OPP terms including DS3 Service that have been initiated prior to August 29, 1992 may, at the Customer's request, be charged as described above or pay a percentage of the monthly charges for the remainder of the term as indicated below:

OPP Terms in Months	Termination Percentage
12	85
36	75
60	60

(1) Effective April 24, 2012, SONET Xpress is available only to existing Customers, for existing service arrangements. Existing Customers may continue to receive service under existing service arrangements, or on a month-to-month basis after their existing service arrangements expire, until SONET Xpress is discontinued.
(2) Effective December 31, 2020, this Service will no longer be available for purchase by new or existing customers, and service agreements may no longer be renewed. In addition, requests to move, add, or change existing service arrangements will not be accepted. Following the expiration of a customer's existing term agreement, service will be provided on a month-to-month basis at the applicable Monthly rate until the service is discontinued. AT&T currently plans to discontinue this Service on or after December 31, 2021.
(3) Effective November 1, 2022, DS1 and DS3 Optional Payment Plan Services, 24- and 36-month plans, and DS1 Discount Commitment Plan, 36-month plans (collectively, Term Plan Services), are no longer available, including conversions. Existing Term Plan Services, as of November 1, 2022, will continue to be provided under the then-current terms, for the remainder of the applicable term.
(4) Effective January 17, 2024, DS1 and DS3 Optional Payment Plan Services, 12-month plans (collectively, Term Plan Services) are no longer available, including conversions. Existing Term Plan Services on January 17, 2024, will continue to be provided for the remainder of the then-current terms. (N) | (N)

ACCESS SERVICE

7. Special Access Service (Cont'd)

7.4 Rate Regulations (Cont'd)

7.4.10 Optional Payment Plan (OPP) for Base Rate, DS1[(3)(4)], DS3[(3)(4)], OC-3, OC-12, OC-48 Services, TV Analog Video Services[(2)], SONET Express Services[(1)], and Serial Component Video Service (Cont'd) (C)

(C) OPP Termination Liabilities (Cont'd)

Except for DS1 and DS3 OPP terms subscribed to under the OPP Renewal Program as described in Section 17.2(6), the termination charges for Base Rate OPP terms subscribed to after October 13, 1997, DS1 and DS3 OPP terms subscribed to after February 20, 1997, and DS3 Service Packages, discontinued prior to the expiration of the selected OPP term will be calculated as follows:

(a) Service discontinued in 1st through 11th month:

(1) DS3 Service Packages with an Optical Interface

(.85 x 12 Mo. OPP rate x [12 - number of Months in service]) + ([12 Mo. OPP rate - subscribed to OPP rate] x number of Months in service)

For example: A Customer subscribed to a 36 month OPP term and disconnected service at the end of the fifth month. This Customer's termination charge would be: (.85 x 12 Mo. OPP rate x [12 - 5 Mos]) + ([12 Mo. OPP rate - 36 Mo OPP rate] x 5 Mos)

(2) Base Rate, DS1 and DS3 rate elements other than Service Packages

(.40 x 12 Mo. OPP rate x [12 - number of Months in service]) + ([12 Mo. OPP rate - subscribed to OPP rate] x number of Months in service)

For example: A Customer subscribed to a 36 month OPP term and disconnected service at the end of the fifth month. This Customer's termination charge would be: (.40 x 12 Mo. OPP rate x [12 - 5 Mos]) + ([12 Mo. OPP rate - 36 Mo OPP rate] x 5 Mos)

(1) Effective April 24, 2012, SONET Xpress is available only to existing Customers, for existing service arrangements. Existing Customers may continue to receive service under existing service arrangements, or on a month-to-month basis after their existing service arrangements expire, until SONET Xpress is discontinued.
(2) Effective December 31, 2020, this Service will no longer be available for purchase by new or existing customers, and service agreements may no longer be renewed. In addition, requests to move, add, or change existing service arrangements will not be accepted. Following the expiration of a customer's existing term agreement, service will be provided on a month-to-month basis at the applicable Monthly rate until the service is discontinued. AT&T currently plans to discontinue this Service on or after December 31, 2021.
(3) Effective November 1, 2022, DS1 and DS3 Optional Payment Plan Services, 24- and 36-month plans, and DS1 Discount Commitment Plan, 36-month plans (collectively, Term Plan Services), are no longer available, including conversions. Existing Term Plan Services, as of November 1, 2022, will continue to be provided under the then-current terms, for the remainder of the applicable term.
(4) Effective January 17, 2024, DS1 and DS3 Optional Payment Plan Services, 12-month plans (collectively, Term Plan Services) are no longer available, including conversions. Existing Term Plan Services on January 17, 2024, will continue to be provided for the remainder of the then-current terms. (N) | (N)

7. Special Access Service (Cont'd)

7.4 Rate Regulations (Cont'd)

7.4.10 Optional Payment Plan (OPP) for Base Rate, DS1, DS3, OC-3, OC-12, OC-48 Services, TV Analog Video Services/2/, SONET Express Services/1/, and Serial Component Video Service (Cont'd) (C)

(C) OPP Termination Liabilities (Cont'd)

(b) Service discontinued in 12th through 60th month:

The dollar difference between the current OPP rate for the OPP term that could have been completed during the time the service was actually in service, and the Customer's current OPP rate for each month the service was provided.

Termination liability for services provided under the Volume Pricing Plan (VPP) for DS3 LDCs with an Electrical Interface as described in Section 7.4.10(I), will be calculated prior to the application of any volume discounts associated with the plan.

Except as provided in Section 7.4.10(D), any Customer terminating a DS1 service that was installed after February 20, 1997, or a DS3 service that was installed after June 10, 1998, before the expiration of the term under which it was installed shall also be liable for a nonrecurring termination charge. The nonrecurring termination charge will be the dollar difference between the nonrecurring charge for an OPP term that could have been completed during the time the service was actually in service, or the nonrecurring charge associated with the minimum service period for services in place less than 12 months, and the nonrecurring charge the Customer actually paid.

(c) Conversion of Service To Combinations of Unbundled Network Elements

The termination liability provisions of Section 7.4.10(C)(a) and (b) shall fully apply to conversions of special access service to UNEs prior to the expiration of the OPP term, provided that termination charges will not apply to conversions of special access circuits ordered and provisioned under this tariff between September 18, 2001 and July 11, 2002 for those telecommunication carriers which were not collocated in a Company central office during that period.

/1/ Effective April 24, 2012, SONET Xpress is available only to existing Customers, for existing service arrangements. Existing Customers may continue to receive service under existing service arrangements, or on a month-to-month basis after their existing service arrangements expire, until SONET Xpress is discontinued.

/2/ Effective December 31, 2020, this Service will no longer be available for purchase by new or existing customers, and service agreements may no longer be renewed. In addition, requests to move, add, or change existing service arrangements will not be accepted. Following the expiration of a customer's existing term agreement, service will be provided on a month-to-month basis at the applicable Monthly rate until the service is discontinued. AT&T currently plans to discontinue this Service on or after December 31, 2021. (N)

7. Special Access Service (Cont'd)

7.4 Rate Regulations (Cont'd)

7.4.10 Optional Payment Plan (OPP) for Base Rate, DS1, DS3, OC-3, OC-12, OC-48 Services, TV Analog Video Services/2/, SONET Express Services/1/ and Serial Component Video Service (cont'd) (C)

(D) Conversion of service to New OPP, Higher Speed, or SONET Xpress Service/1/

During a customer's OPP term, conversion may be made to a new OPP term of the same or different length or to a higher speed service or to the same or higher speed SONET Xpress/1/ service. If the expiration date for the new service or OPP term is beyond the end of the original OPP term, the remaining OPP charges and any nonrecurring termination charges for the original term will not apply. If no physical changes are made to the service, the Administrative Charge, the Design and Central Office Connection Charge and the Customer Connection Charge will not apply.

/1/ Effective April 24, 2012, SONET Xpress is available only to existing Customers, for existing service arrangements. Existing Customers may continue to receive service under existing service arrangements, or on a month-to-month basis after their existing service arrangements expire, until SONET Xpress is discontinued.

/2/ Effective December 31, 2020, this Service will no longer be available for purchase by new or existing customers, and service agreements may no longer be renewed. In addition, requests to move, add, or change existing service arrangements will not be accepted. Following the expiration of a customer's existing term agreement, service will be provided on a month-to-month basis at the applicable Monthly rate until the service is discontinued. AT&T currently plans to discontinue this Service on or after December 31, 2021. (N)

7. Special Access Service (Cont'd)

7.4 Rate Regulations (Cont'd)

/1/

/1/

/1/ Certain material previously on this page now appears on 2nd Revised Page 309.1.1.3.

7. Special Access Service (Cont'd)

7.4 Rate Regulations (Cont'd)

7.4.10 Optional Payment Plan (OPP) for Base Rate, DS1, DS3, OC-3, OC-12, OC-48 Services, TV Analog Video Services/2/, SONET Express Services/1/, and Serial Component Video Service (Cont'd) (C)

(E) Moves

DS1 Service and Base Rate Service

During an OPP term a Customer may move one Local Distribution Channel (LDC) of an DS1 or Base Rate service to another location in the same LATA and keep the OPP in force, provided no lapse in service occurs. Nonrecurring charges for the move will be based on the Customer's existing OPP term.

During an OPP term, a Customer may purchase a Local Channel Diversity Arrangement or an Interwire Center Diversity Arrangement (described in Section 11.1.1) and move an in-service DS1 or Base Rate Service to one of these arrangements while keeping the OPP in force, provided the Customer's premises and serving wire center remain the same and no lapse in service occurs.

/1/ Effective April 24, 2012, SONET Xpress is available only to existing Customers, for existing service arrangements. Existing Customers may continue to receive service under existing service arrangements, or on a month-to-month basis after their existing service arrangements expire, until SONET Xpress is discontinued.

/2/ Effective December 31, 2020, this Service will no longer be available for purchase by new or existing customers, and service agreements may no longer be renewed. In addition, requests to move, add, or change existing service arrangements will not be accepted. Following the expiration of a customer's existing term agreement, service will be provided on a month-to-month basis at the applicable Monthly rate until the service is discontinued. AT&T currently plans to discontinue this Service on or after December 31, 2021. (N)

7. Special Access Service (Cont'd)

7.4 Rate Regulations (Cont'd)

7.4.10 Optional Payment Plan (OPP) for Base Rate, DS1/3/, DS3/3/, OC-3, OC-12, OC-48 Services, TV Analog Video Services/2/, SONET Express Services/1/, and Serial Component Video Service (Cont'd) (C)

(E) Moves (Cont'd)

(ii) DS3 Service

During an OPP term, a Customer may move one end of a DS3 Service to another location within the same LATA without incurring termination charges, as described in G following, provided the following conditions are met:

- The DS3 Service has satisfied the twelve month minimum service period requirement at the old location,
- for DS3 Service Channels with an Optical Interface, the number of DS3 Service Channels with an Optical Interface at the new location must be the same or greater than the number of DS3 Service Channels with an Optical Interface being discontinued at the old location,
- the Customer subscribes to a new OPP term at the new location that is equal to, or greater than the remaining period of the OPP term being discontinued at the old location and,
- no lapse in service occurs.

A new twelve-month/4/ minimum service period requirement will apply to the DS3 Service at the new location. The monthly rates for the new service will be those rates in effect at the time the new service is installed. (C)

/1/ Effective April 24, 2012, SONET Xpress is available only to existing Customers, for existing service arrangements. Existing Customers may continue to receive service under existing service arrangements, or on a month-to-month basis after their existing service arrangements expire, until SONET Xpress is discontinued.

/2/ Effective December 31, 2020, this Service will no longer be available for purchase by new or existing customers, and service agreements may no longer be renewed. In addition, requests to move, add, or change existing service arrangements will not be accepted. Following the expiration of a customer's existing term agreement, service will be provided on a month-to-month basis at the applicable Monthly rate until the service is discontinued. AT&T currently plans to discontinue this Service on or after December 31, 2021.

/3/ Effective January 17, 2024, DS1 and DS3 Optional Payment Plan Services, 12-month plans (collectively, Term Plan Services) are no longer available, including conversions. Existing Term Plan Services on January 17, 2024, will continue to be provided for the remainder of the then-current terms. (N)

/4/ Effective January 17, 2024, the 12-month minimum period no longer applies. (N)

7. Special Access Service (Cont'd)

7.4 Rate Regulations (Cont'd)

7.4.10 Optional Payment Plan (OPP) for Base Rate, DS1[(4)(5)], DS3[(4)(5)], OC-3, OC-12, OC-48 Services, TV Analog Video Services[(3)], SONET Express Services[(1)], and Serial Component Video Service (Cont'd) (C)

(F) NRS

During a Customer's OPP term, a Customer may elect to include a DS3, DS1 or an Base Rate service into the Customer's Ameritech Network Reconfiguration Service (NRS) database. The Customer may opt to convert to a new OPP term of the same or different length or to continue the current OPP term to the original expiration date. If the expiration date for the new OPP term is beyond the end of the original OPP term, termination charges for the original term will not apply. Adding an existing service to the Customer's NRS database requires that all nonrecurring charges applicable to the installation of the service apply.

(G) DS3 Service Package with an Optical Interface Upgrade

During a Customer's OPP term, conversion may be made from one DS3 Service Package with an Optical Interface to another larger package (e.g., DS3012 to DS3024) for a new OPP term of the same or different length. If the expiration date of the new OPP term is beyond the end of the original OPP term, termination charges will not apply to the original OPP term.

Monthly Extension rates for DS3 Service will apply only after a Customer has completed an OPP term or an ICB minimum period.

(H) Moving Services from an OPP Term to a DCP Term[(2)]

Customers may terminate Optional Payment Plans for Base Rate and DS1 services in states where they have effective Discount Commitment Program terms for those services. Upon termination of these Optional Payment Plans, the services will begin being billed DCP (as described in Section 7.4.13) rates subject to the DCP terms and conditions. No termination liability charges will be applied to services that move from an OPP term to a DCP term.

(1) Effective April 24, 2012, SONET Xpress is available only to existing Customers, for existing service arrangements. Existing Customers may continue to receive service under existing service arrangements, or on a month-to-month basis after their existing service arrangements expire, until SONET Xpress is discontinued.
(2) For DCPs established on or after September 10, 2016, moves from OPP to DCP are not allowed.
(3) Effective December 31, 2020, this Service will no longer be available for purchase by new or existing customers, and service agreements may no longer be renewed. In addition, requests to move, add, or change existing service arrangements will not be accepted. Following the expiration of a customer's existing term agreement, service will be provided on a month-to-month basis at the applicable Monthly rate until the service is discontinued. AT&T currently plans to discontinue this Service on or after December 31, 2021.
(4) Effective November 1, 2022, DS1 and DS3 Optional Payment Plan Services, 24- and 36-month plans, and DS1 Discount Commitment Plan, 36-month plans (collectively, Term Plan Services), are no longer available, including conversions. Existing Term Plan Services, as of November 1, 2022, will continue to be provided under the then-current terms, for the remainder of the applicable term.
(5) Effective January 17, 2024, DS1 and DS3 Optional Payment Plan Services, 12-month plans (collectively, Term Plan Services) are no longer available, including conversions. Existing Term Plan Services on January 17, 2024, will continue to be provided for the remainder of the then-current terms. (N) | (N)

7. Special Access Service (Cont'd)

7.4 Rate Regulations (Cont'd)

7.4.10 Optional Payment Plan (OPP) for Base Rate, DS1, DS3, OC-3, OC-12, OC-48 Services, TV Analog Video Services/2/, SONET Express Services/1/, and Serial Component Video Service (Cont'd) (C)

(I) Volume Pricing Plan for DS3 Local Distribution Channels with an Electrical Interface

(1) General

The Volume Pricing Plan (VPP) will be grandfathered as of January 26, 2002. Customers with OPPs on order or in effect prior to January 26, 2002 will continue to receive the VPP until their OPP term expires. The VPP will not be available with OPPs that are ordered on or after January 26, 2002.

The Volume Pricing Plan (VPP) for DS3 Local Distribution Channels (LDCs) with an Electrical Interface (EI) provides rate discounts to Customers based on the number of DS3 LDCs with an EI provided to the Customer's designated premises and the Optional Payment Plan term selected by the Customer.

The following volume discounts, shown in terms of percentage discounts, will be applied to DS3 LDC rates as specified in Section 7.5.9 (C) (1) (a). The volume discount will be based on the OPP term selected by the Customer and the number of DS3 LDCs with an Electrical Interface provided to the same Customer designated premises and will be provided as a credit on the Customer's monthly bill.

		Volume Discount Percentage Optional Payment Plan Term		
Volume Discount Band	DS3 LDC Quantity	12 and 24 Month	36 and 48 Month	60 Month
A	2	19.5%	2.4%	2.3%
B	3 to 5	23.6%	5.8%	5.5%
C	6 to 11	30.6%	8.5%	12.6%
D	12 to 23	41.8%	25.2%	25.2%
E	24 or more	52.4%	38.0%	33.8%

/1/ Effective April 24, 2012, SONET Xpress is available only to existing Customers, for existing service arrangements. Existing Customers may continue to receive service under existing service arrangements, or on a month-to-month basis after their existing service arrangements expire, until SONET Xpress is discontinued.

/2/ Effective December 31, 2020, this Service will no longer be available for purchase by new or existing customers, and service agreements may no longer be renewed. In addition, requests to move, add, or change existing service arrangements will not be accepted. Following the expiration of a customer's existing term agreement, service will be provided on a month-to-month basis at the applicable Monthly rate until the service is discontinued. AT&T currently plans to discontinue this Service on or after December 31, 2021. (N)

7. Special Access Service (Cont'd)

7.4 Rate Regulations (Cont'd)

7.4.10 Optional Payment Plan (OPP) for Base Rate, DS1, DS3, OC-3, OC-12, OC-48 Services, TV Analog Video Services/2/, SONET Express Services/1/, and Serial Component Video Service (Cont'd) (C)

(I) Volume Pricing Plan for DS3 Local Distribution Channels with an Electrical Interface (Cont'd)

(1) General (Cont'd)

At the end of each monthly billing period, billing for DS3 LDCs with an EI that are provided under an OPP term will be adjusted via a billing credit. The monthly credit will be developed by determining the number of DS3 LDCs with an EI provided to the Customer's designated premises, along with their associated OPP payment term, in service at the end of the monthly billing period. The preceding discount percentages will be applied to all of the customer's DS3 LDCs with a EI that are provided under the same OPP term, and billed to the same Customer billing account and will be provided as a credit to the Customer's monthly DS3 billing.

(2) Regulations

All of the Customers in service DS3 LDCs with an EI provided under an OPP term, (both interstate access and intrastate access), along with all of the Customer's LT-3 Entrance Facilities with an EI provided under an OPP term, as described in Section 6.8.2(D)(6)(g), will be used to determine the Volume Discount Band applicable for that monthly billing period.

When a Customer has DS3 LDCs with an EI provided under different OPP payment terms, each OPP payment term will be administered separately and a Volume Discount Band will be determined for each OPP term based on the Customer's in service quantities for that term.

When there is more than one DS3 Local Distribution Channel termination location at the Customer designated premises, each location will be administered separately and a Volume Discount Band(s) will be determined based on the DS3 Local Distribution Channel OPP term(s) at that location.

When the Customer has elected the Prepayment of an OPP option as described in Section 7.4.10 (B), prepaid DS3 LDCs with an EI will be included in the monthly count of DS3 LDCs with an EI in order to determine the Volume Discount Band applicable for that monthly billing period, however, only non-prepaid DS3 LDCs with an EI will be discounted under the VPP.

/1/ Effective April 24, 2012, SONET Xpress is available only to existing Customers, for existing service arrangements. Existing Customers may continue to receive service under existing service arrangements, or on a month-to-month basis after their existing service arrangements expire, until SONET Xpress is discontinued.

/2/ Effective December 31, 2020, this Service will no longer be available for purchase by new or existing customers, and service agreements may no longer be renewed. In addition, requests to move, add, or change existing service arrangements will not be accepted. Following the expiration of a customer's existing term agreement, service will be provided on a month-to-month basis at the applicable Monthly rate until the service is discontinued. AT&T currently plans to discontinue this Service on or after December 31, 2021. (N) (N)

7. Special Access Service (Cont'd)

7.4 Rate Regulations (Cont'd)

7.4.10 Optional Payment Plan (OPP) for Base Rate, DS1[(3)(4)], DS3[(3)(4)], OC-3, OC-12, OC-48 Services, TV Analog Video Services[(2)], SONET Express Services[(1)], and Serial Component Video Service (Cont'd) (C)

(I) Volume Pricing Plan for DS3 Local Distribution Channels with an Electrical Interface (Cont'd)

(3) Conversion of DS3 Service Package and Service Channels in service prior to October 15, 1999

Except for DS3 Service Packages with an EI provided under OPP Vintage Rates as specified in Section 7.5.16, all DS3 Service Packages and Service Channels with an EI in service as of October 15, 1999, will be converted to individual DS3 LDCs with an EI. DS3 LDCs with an EI that are converted from a DS3 Service Package will be converted to the same OPP payment term, and retain the same expiration date as the Service Package. All terms and conditions described above related to the VPP will apply to converted DS3 LDCs.

Conversion Credit for Converted DS3 LDCs

When a converted DS3 LDC rate under the VPP is higher than its equivalent rate under the discontinued Service Package structure, the Customer will be given a one time credit, as shown following, based on the difference between what the Customer would have paid under the Service Package structure and what the Customer will pay under the VPP. The credit will be equal to the difference between the monthly rate for the Service Package, with activated DS3s, and the VPP rate for the same number of DS3s, times the number of months remaining in the customer's OPP term.

For example: assume that 10 converted DS3s were part of a former DS3L Service Package with 10 DS3s activated and the Service Package was located in a rate zone 3 wire center under a 60 month OPP term with six months remaining on the OPP term. The DS3 Conversion Credit will be calculated as follows:

$415.42 (DS3 conversion credit for a rate zone 3 DS3L Service Package with 10 activated DS3s provided under a 60 month OPP term) X 6 (months remaining on the OPP term) = $2,492.52 (Conversion Credit)

(1) Effective April 24, 2012, SONET Xpress is available only to existing Customers, for existing service arrangements. Existing Customers may continue to receive service under existing service arrangements, or on a month-to-month basis after their existing service arrangements expire, until SONET Xpress is discontinued.
(2) Effective December 31, 2020, this Service will no longer be available for purchase by new or existing customers, and service agreements may no longer be renewed. In addition, requests to move, add, or change existing service arrangements will not be accepted. Following the expiration of a customer's existing term agreement, service will be provided on a month-to-month basis at the applicable Monthly rate until the service is discontinued. AT&T currently plans to discontinue this Service on or after December 31, 2021.
(3) Effective November 1, 2022, DS1 and DS3 Optional Payment Plan Services, 24- and 36-month plans, and DS1 Discount Commitment Plan, 36-month plans (collectively, Term Plan Services), are no longer available, including conversions. Existing Term Plan Services, as of November 1, 2022, will continue to be provided under the then-current terms, for the remainder of the applicable term.
(4) Effective January 17, 2024, DS1 and DS3 Optional Payment Plan Services, 12-month plans (collectively, Term Plan Services) are no longer available, including conversions. Existing Term Plan Services on January 17, 2024, will continue to be provided for the remainder of the then-current terms. (N) | (N)

7. Special Access Service (Cont'd)

7.4 Rate Regulations (Cont'd)

7.4.10 Optional Payment Plan (OPP) for Base Rate, DS1, DS3, OC-3, OC-12, OC-48 Services, TV Analog Video Services/2/, SONET Express Services/1/, and Serial Component Video Service (Cont'd) (C)

(I) Volume Pricing Plan for DS3 Local Distribution Channels with an Electrical Interface (Cont'd)

(3) Conversion of DS3 Service Package and Service Channels in service prior to October 15, 1999 (Cont'd)

Any Customer terminating a DS3 LDC that was provided a DS3 Conversion Credit before the expiration of the OPP term under which it was converted shall be liable for a Conversion Credit termination charge. The Conversion Credit termination charge for each DS3 LDC terminated shall be equal to the monthly DS3 Conversion Credit originally provided to the Customer, divided by the number of activated DS3s in the original Service Package times the number of months remaining in the Customer's OPP term.

For example: Assume that 1 DS3 Local Distribution Channel, which is part of a former DS3L Service Package with 10 activated DS3s located in a rate zone 3 wire center under a 60 month OPP term, is discontinued 3 months before the expiration of its OPP term. The Conversion Credit termination charge will be calculated as follows:

$415.42 (monthly conversion credit for a DS3L Service Package with 10 activated DS3s in a rate zone 3 wire center under a 60 month OPP term) /10 (number of converted DS3s) = $41.54 (Conversion Credit for 1 DS3) x 3 (number of months remaining in the Customers 60 month OPP term) = $124.62 (Conversion Credit termination charge).

The following one time DS3 Conversion Credit amounts, times the number of months remaining in the OPP term, apply to converted DS3 LDCs:

/1/ Effective April 24, 2012, SONET Xpress is available only to existing Customers, for existing service arrangements. Existing Customers may continue to receive service under existing service arrangements, or on a month-to-month basis after their existing service arrangements expire, until SONET Xpress is discontinued.

/2/ Effective December 31, 2020, this Service will no longer be available for purchase by new or existing customers, and service agreements may no longer be renewed. In addition, requests to move, add, or change existing service arrangements will not be accepted. Following the expiration of a customer's existing term agreement, service will be provided on a month-to-month basis at the applicable Monthly rate until the service is discontinued. AT&T currently plans to discontinue this Service on or after December 31, 2021. (N)

7. Special Access Service (Cont'd)

7.4 Rate Regulations (Cont'd)

7.4.10 Optional Payment Plan (OPP) for Base Rate, DS1, DS3, OC-3, OC-12, OC-48 Services, TV Analog Video Services/2/, SONET Express Services/1/, and Serial Component Video Service (Cont'd) (C)

(I) Volume Pricing Plan for DS3 Local Distribution Channels with an Electrical Interface (Cont'd)

(3) Conversion of DS3 Service Package and Service Channels in service prior to October 15, 1999 (Cont'd)

Conversion Credit for Converted DS3 LDCs

DS3 Service Package - 12 Month OPP	Conversion Credit Area A	Area B	Area C
- DS3B			
Activated DS3s			
- 2	-	-	$ 46.06
- DS3C			
Activated DS3s			
- 3	-	-	74.06
- DS3F			
Activated DS3s			
- 6	-	$ 1.90	160.02
- DS3L			
Activated DS3s			
- 10	$ 541.80	675.66	1,016.70
- 11	1,855.98	2,037.73	2,548.37
- 12	-	-	310.12
- DS3X			
Activated DS3s			
- 18	-	-	435.18
- 19	813.26	1,051.26	1,652.69
- 20	1,850.80	2,128.96	2,870.20
- 21	2,888.34	3,206.66	4,087.71
- 22	3,925.88	4,284.36	5,305.22
- 23	4,963.42	5,362.05	6,522.73
- 24	-	-	604.32

/1/ Effective April 24, 2012, SONET Xpress is available only to existing Customers, for existing service arrangements. Existing Customers may continue to receive service under existing service arrangements, or on a month-to-month basis after their existing service arrangements expire, until SONET Xpress is discontinued.

/2/ Effective December 31, 2020, this Service will no longer be available for purchase by new or existing customers, and service agreements may no longer be renewed. In addition, requests to move, add, or change existing service arrangements will not be accepted. Following the expiration of a customer's existing term agreement, service will be provided on a month-to-month basis at the applicable Monthly rate until the service is discontinued. AT&T currently plans to discontinue this Service on or after December 31, 2021. (N)

ACCESS SERVICE

7. Special Access Service (Cont'd)

7.4 Rate Regulations (Cont'd)

7.4.10 Optional Payment Plan (OPP) for Base Rate, DS1, DS3, OC-3, OC-12, OC-48 Services, TV Analog Video Services/2/, SONET Express Services/1/, and Serial Component Video Service (Cont'd) (C)

(I) Volume Pricing Plan for DS3 Local Distribution Channels with an Electrical Interface (Cont'd)

(3) Conversion of DS3 Service Package and Service Channels in service prior to October 15, 1999 (Cont'd)

Conversion Credit for Converted DS3 LDCs (Cont'd)

DS3 Service Package - 24 Month OPP	Conversion Credit Area A	Area B	Area C
- DS3B			
Activated DS3s			
- 2	$ 247.60	$ 259.98	$ 285.70
- DS3C			
Activated DS3s			
- 3	429.72	451.66	497.04
- DS3F			
Activated DS3s			
- 5	297.20	319.76	363.40
- 6	640.24	682.75	763.68
- DS3L			
Activated DS3s			
- 8	-	23.34	63.24
- 9	1,093.36	1,162.63	1,293.02
- 10	2,192.40	2,301.92	2,522.80
- 11	3,291.44	3,441.21	3,752.58
- 12	1,487.44	1,599.51	1,797.08
- DS3X			
Activated DS3s			
- 16	325.92	420.02	554.44
- 17	1,183.04	1,310.89	1,518.78
- 18	2,040.16	2,291.77	2,483.12
- 19	2,897.28	3,092.64	3,447.46
- 20	3,754.40	3,983.52	4,411.80
- 21	4,611.52	4,874.40	5,376.14
- 22	5,468.64	5,765.27	6,340.48
- 23	6,325.76	6,656.15	7,304.82
- 24	1,687.84	1,904.43	3,239.88

/1/ Effective April 24, 2012, SONET Xpress is available only to existing Customers, for existing service arrangements. Existing Customers may continue to receive service under existing service arrangements, or on a month-to-month basis after their existing service arrangements expire, until SONET Xpress is discontinued.

/2/ Effective December 31, 2020, this Service will no longer be available for purchase by new or existing customers, and service agreements may no longer be renewed. In addition, requests to move, add, or change existing service arrangements will not be accepted. Following the expiration of a customer's existing term agreement, service will be provided on a month-to-month basis at the applicable Monthly rate until the service is discontinued. AT&T currently plans to discontinue this Service on or after December 31, 2021. (N)

7. Special Access Service (Cont'd)

7.4 Rate Regulations (Cont'd)

7.4.10 Optional Payment Plan (OPP) for Base Rate, DS1, DS3, OC-3, OC-12, OC-48 Services, TV Analog Video Services/2/, SONET Express Services/1/, and Serial Component Video Service (Cont'd) (C)

(I) Volume Pricing Plan for DS3 Local Distribution Channels with an Electrical Interface (Cont'd)

(3) Conversion of DS3 Service Package and Service Channels in service prior to October 15, 1999 (Cont'd)

Conversion Credit for Converted DS3 LDCs (Cont'd)

DS3 Service Package - 36 Month OPP	Conversion Credit Area A	Area B	Area C
- DS3B			
Activated DS3s			
- 2	-	$ .55	$ .30
- DS3C			
Activated DS3s			
- 3	-	-	.45
- DS3L			
Activated DS3s			
- 9	$ 74.93	230.74	-
- 10	823.25	1,021.15	784.20
- 11	1,571.58	1,811.57	1,602.62
- DS3X			
Activated DS3s			
- 18	247.32	551.66	179.47
- 19	786.06	1,124.81	772.78
- 20	1,324.80	1,697.96	1,366.08
- 21	1,863.54	2,271.11	1,959.38
- 22	2,402.28	2,844.26	2,552.69
- 23	2,941.02	3,417.40	3,145.99

/1/ Effective April 24, 2012, SONET Xpress is available only to existing Customers, for existing service arrangements. Existing Customers may continue to receive service under existing service arrangements, or on a month-to-month basis after their existing service arrangements expire, until SONET Xpress is discontinued.

/2/ Effective December 31, 2020, this Service will no longer be available for purchase by new or existing customers, and service agreements may no longer be renewed. In addition, requests to move, add, or change existing service arrangements will not be accepted. Following the expiration of a customer's existing term agreement, service will be provided on a month-to-month basis at the applicable Monthly rate until the service is discontinued. AT&T currently plans to discontinue this Service on or after December 31, 2021. (N)

7. Special Access Service (Cont'd)

7.4 Rate Regulations (Cont'd)

7.4.10 Optional Payment Plan (OPP) for Base Rate, DS1, DS3, OC-3, OC-12, OC-48 Services, TV Analog Video Services/2/, SONET Express Services/1/, and Serial Component Video Service (Cont'd) (C)

(I) Volume Pricing Plan for DS3 Local Distribution Channels with an Electrical Interface (Cont'd)

(3) Conversion of DS3 Service Package and Service Channels in service prior to October 15, 1999 (Cont'd)

Conversion Credit for Converted DS3 LDCs (Cont'd)

DS3 Service Package - 48 Month OPP	Conversion Credit Area A	Area B	Area C
- DS3B			
Activated DS3s			
- 2	$ 20.57	-	$ 27.49
- DS3F			
Activated DS3s			
- 6	45.66	$ 34.98	2.31
- DS3L			
Activated DS3s			
- 9	158.49	145.47	103.47
- 10	796.10	802.30	803.85
- 11	1,433.71	1,459.13	1,504.24
- DS3X			
Activated DS3s			
- 18	58.18	73.92	42.62
- 19	506.41	537.86	539.43
- 20	954.64	1,001.80	1,036.24
- 21	1,402.87	1,465.74	1,533.05
- 22	1,851.10	1,929.68	2,029.86
- 23	2,299.34	2,393.62	2,526.68

/1/ Effective April 24, 2012, SONET Xpress is available only to existing Customers, for existing service arrangements. Existing Customers may continue to receive service under existing service arrangements, or on a month-to-month basis after their existing service arrangements expire, until SONET Xpress is discontinued.

/2/ Effective December 31, 2020, this Service will no longer be available for purchase by new or existing customers, and service agreements may no longer be renewed. In addition, requests to move, add, or change existing service arrangements will not be accepted. Following the expiration of a customer's existing term agreement, service will be provided on a month-to-month basis at the applicable Monthly rate until the service is discontinued. AT&T currently plans to discontinue this Service on or after December 31, 2021. (N)

7. Special Access Service (Cont'd)

7.4 Rate Regulations (Cont'd)

7.4.10 Optional Payment Plan (OPP) for Base Rate, DS1, DS3, OC-3, OC-12, OC-48 Services, TV Analog Video Services/2/, SONET Express Services/1/, and Serial Component Video Service (Cont'd) (C)

(I) Volume Pricing Plan for DS3 Local Distribution Channels with an Electrical Interface (Cont'd)

(3) Conversion of DS3 Service Package and Service Channels in service prior to October 15, 1999 (Cont'd)

Conversion Credit for Converted DS3 LDCs (Cont'd)

DS3 Service Package - 60 Month OPP	Conversion Credit Area A	Area B	Area C
- DS3B			
Activated DS3s			
- 2	-	-	$ .18
- DS3C			
Activated DS3s			
- 3	-	-	.30
- DS3F			
Activated DS3s			
- 6	-	$ .49	-
- DS3L			
Activated DS3s			
- 9	-	47.24	-
- 10	$ 399.92	558.82	415.42
- 11	880.91	1,070.40	946.96
- 12	-	4.97	-
- DS3X			
Activated DS3s			
- 19	-	248.12	6.60
- 20	329.68	628.28	401.68
- 21	683.66	1,008.44	796.76
- 22	1,037.65	1,388.61	1,191.85
- 23	1,391.63	1,768.77	1,586.93

/1/ Effective April 24, 2012, SONET Xpress is available only to existing Customers, for existing service arrangements. Existing Customers may continue to receive service under existing service arrangements, or on a month-to-month basis after their existing service arrangements expire, until SONET Xpress is discontinued.

/2/ Effective December 31, 2020, this Service will no longer be available for purchase by new or existing customers, and service agreements may no longer be renewed. In addition, requests to move, add, or change existing service arrangements will not be accepted. Following the expiration of a customer's existing term agreement, service will be provided on a month-to-month basis at the applicable Monthly rate until the service is discontinued. AT&T currently plans to discontinue this Service on or after December 31, 2021. (N)

7. Special Access Service (Cont'd)

7.4 Rate Regulations (Cont'd)

7.4.10 Optional Payment Plan (OPP) for Base Rate, DS1, DS3, OC-3, OC-12, OC-48 Services, TV Analog Video Services/2/, SONET Express Services/1/, and Serial Component Video Service (Cont'd) (C)

(I) Volume Pricing Plan for DS3 Local Distribution Channels with an Electrical Interface (Cont'd)

(3) Conversion of DS3 Service Package and Service Channels in service prior to October 15, 1999 (Cont'd)

(ii) Termination Liability for Converted DS3 LDCs

Customers requesting termination of converted DS3 LDCs with an EI prior to the expiration date of the original OPP term may be liable for a termination charge. The termination charge for all OPP terms will be calculated as follows:

If the terminated DS3 LDC was a former DS3 Service Package with a capacity of one, the termination liability will be calculated as described in 7.4.10 C, preceding.

If the terminated DS3 LDC was part of a former DS3 Service Package with a capacity of more than one, and the terminated DS3 LDC will not bring the total number of DS3 LDCs remaining under the minimum required for the Service Package, as shown following, no termination liability will apply. If the terminated DS3 LDC will bring the total number of DS3 LDCs remaining under the minimum required for the Service Package, termination liability will be calculated as described in 7.4.10 C preceding.

/1/ Effective April 24, 2012, SONET Xpress is available only to existing Customers, for existing service arrangements. Existing Customers may continue to receive service under existing service arrangements, or on a month-to-month basis after their existing service arrangements expire, until SONET Xpress is discontinued.

/2/ Effective December 31, 2020, this Service will no longer be available for purchase by new or existing customers, and service agreements may no longer be renewed. In addition, requests to move, add, or change existing service arrangements will not be accepted. Following the expiration of a customer's existing term agreement, service will be provided on a month-to-month basis at the applicable Monthly rate until the service is discontinued. AT&T currently plans to discontinue this Service on or after December 31, 2021. (N)

ACCESS SERVICE

7. Special Access Service (Cont'd)

7.4 Rate Regulations (Cont'd)

7.4.10 Optional Payment Plan (OPP) for Base Rate, DS1, DS3, OC-3, OC-12, OC-48 Services, TV Analog Video Services/3/, SONET Express Services/1/, and Serial Component Video Service (Cont'd) (C)

(I) Volume Pricing Plan for DS3 Local Distribution Channels with an Electrical Interface (Cont'd)

(3) Conversion of DS3 Service Package and Service Channels in service prior to October 15, 1999 (Cont'd)

(ii) Termination Liability for Converted DS3 LDCs (Cont'd)

For example, if 4 DS3s were part of a former DS3F Service Package and 1 of the DS3s is terminated prior to the expiration date of the original Service Package OPP term, no termination liability will apply. However, if an additional DS3 is terminated prior to the expiration date of the original Service Package OPP term, and the Customer's total number of DS3s billed under the same OPP term falls below the minimum requirement for the former Service Package (i.e., less than 3 DS3s for a DS3F Service Package) termination liability for the terminated DS3 will be calculated as described in Section 7.4.10(C).

DS3 Service Package With Electrical Interface	Minimum Required DS3 LDCs	Maximum Available DS3 LDCs
DS3B	1	2
DS3C	1	3
DS3F	3	6
DS3L	7	12
DS3X	13	24

(J) Moving Services from an OPP Term to a New DCP Term/2/

Customers who do not have an effective DCP term in place may terminate Optional Payment Plans for Base Rate and DS1 services where they establish a new DCP term of equal or greater length for those services. No termination liability charges will be applied to services that move from an OPP term to such a new DCP term. Upon termination of these Optional Payment Plans, the services will begin being billed DCP (as described in Section 7.4.13 following) rates subject to the DCP terms and conditions except for Section 7.4.13 (G). Services converted from an OPP term to a new DCP term may not convert back to an OPP term.

/1/ Effective April 24, 2012, SONET Xpress is available only to existing Customers, for existing service arrangements. Existing Customers may continue to receive service under existing service arrangements, or on a month-to-month basis after their existing service arrangements expire, until SONET Xpress is discontinued.

/2/ For DCPs established on or after September 10, 2016, moves from OPP to DCP are not allowed.

/3/ Effective December 31, 2020, this Service will no longer be available for purchase by new or existing customers, and service agreements may no longer be renewed. In addition, requests to move, add, or change existing service arrangements will not be accepted. Following the expiration of a customer's existing term agreement, service will be provided on a month-to-month basis at the applicable Monthly rate until the service is discontinued. AT&T currently plans to discontinue this Service on or after December 31, 2021. (N) (N)

7. Special Access Service

7.4 Rate Regulations (Cont'd)

7.4.11 Fiber Hubs for DS1 or DS3 Services

A customer has the option of ordering DS3, DS1 (excluding DS1 - 128.0, 256.0 and 384.0 Kbps transport) Base Rate or Direct Analog[1] services to terminate in a Fiber Hub for cross-connection to another service of the same speed. Fiber Hub locations are specified in National Exchange Carrier Association Tariff F.C.C. No. 4. (N)

When a customer orders a service terminating in a Fiber Hub, the service is installed, and service parameters are measured from the customer designated premises to the Fiber Hub. When this service is subsequently cross-connected to another service, the two cross-connected services are treated separately for service performance measurement and service interruption credit purposes. For example, if Customer A cross-connects to Customer B's service at a Fiber Hub, and Customer B's service is subsequently interrupted, the Telephone Company will credit only Customer B for the service interruption.

DS1 channels from two multiplexed DS3 services may be cross-connected at the Fiber Hub. The customer must provide the DS3 system and channel assignment information for the DS1 channels.

[1] Effective September 9, 2020, this Service will no longer be available for purchase by new or existing customers, and service agreements may no longer be renewed. In addition, requests to move, add or change existing service arrangements will not be accepted. Following the expiration of a customer's existing term agreement, service will be provided on a month-to-month basis at the applicable monthly extension rates until the service is discontinued. AT&T currently plans to discontinue this Service on or after June 30, 2024. (N)

7. Special Access Service (Cont'd)

7.4 Rate Regulations (Cont'd)

7.4.12 Shared Network Arrangement(1)

Each customer entering into a Shared Network Arrangement is solely responsible to the Telephone Company for charges associated with that customer's portion of the shared network. Disconnection of service by the Host Subscriber does not relieve another user of the network of any obligation to pay access charges associated with the portion of the shared network to which that user subscribes. Billing for services and facilities will continue until a disconnect request from the Service User has been received by the Telephone Company. The Host Subscriber is solely responsible for notifying the connecting Service User in the event of disconnection of the Host service which affects that portion of the shared network service to which the Service User has subscribed.

For administrative purposes, one "Arrangement" under the Shared Network Arrangement offering shall be limited to the agreement between one Host Subscriber and one Service User permitting the Service User to connect a specified number of subtending circuits to one specified multiplexer on the Host's service. Agreements between one Host Subscriber and two (or three, etc.) Service Users shall be deemed to comprise two (or three, etc., respectively) separate "Arrangements". However, an agreement to expand the scope of an existing Arrangement by subsequently increasing the number of subtending circuits on the same multiplexer shall not constitute a new or separate "Arrangement".

Shared use as described in Section 7.4.9 will apply to both the Host Subscriber's and Service User's portion of the service for which they are billed. Any reconciliation of Shared Use as described in Section 7.4.9 must be negotiated between the Host Subscribers and Service Users.

A Shared Network Arrangement shall be established between a Host Subscriber and a Service User upon the completion of the service order for the first circuit(s) in the arrangement. No Shared Network Arrangement shall be deemed to be in effect until at least one subtending circuit has been installed for the Service User. A Shared Network Arrangement shall be deemed canceled when the last subtending circuit has been disconnected.

A Processing Charge will apply for handling each service order in a Shared Network Arrangement when a Service User orders that a subtending circuit(s) be connected to a Host Subscriber's multiplexed service. The Processing Charge is contained in Section 7.5.9(D) and applies in addition to all other applicable rates and charges.

(1) Effective 06/01/06, this regulation is limited to existing customers. For new customers purchasing Shared Network Arrangement, terms and conditions set forth in Section 5.2 (A), will apply.

7. Special Access Service
7.4 Rate Regulations (Cont'd)
7.4.13 Discount Commitment Program (DCP)/1//4/ (C)
(A) General Description

The Discount Commitment Program (DCP) provides the customer with rate stabilization and discounted rates for Direct Analog(3), Base Rate and DS1 services (described in Sections 7.2.3 and 7.2.9, preceding), except the DCP is not available for DS1 Local Distribution Channels (LDC) associated with 128, 256 and 384 Kbps Channel Mileage Termination and Channel Mileage, installed after January 26, 2001. The customer agrees to a minimum service commitment per service per state when establishing a DCP. Customers may disconnect or move Local Distribution Channels within the state and not be subject to Termination Liability charges as long as commitment levels are maintained.

DCPs may be established by service by state and be of either 3 or 5 years duration(2) A customer may have only one DCP per service per state in effect at one time. For example, a customer that has a 3 year DCP for Direct Analog(3) service may not establish a second Direct Analog(3) DCP in Illinois until the current DCP expires.

Monthly rates for services installed under a DCP will change as Telephone Company initiated rate changes become effective but during the DCP term will not exceed the monthly rate in effect at the beginning of the customer's DCP term. During the term of the selected DCP, Telephone Company initiated rate changes (increases or decreases) will automatically be applied to the monthly rates for the remaining months of the current DCP term. But in no case will any rate change cause the monthly rate during the DCP term to exceed that in effect at the beginning of the customer's DCP term.

(B) For DCPs established prior to September 10, 2016, the terms and conditions associated with the DCP are as follows in this section 7.4.13 (B):

(1) Commitment Level

A customer establishes a DCP term by committing 90 percent or more of their in service Local Distribution Channels to a term of either 3 or 5 years duration. Although the commitment is based upon Local Distribution Channels, the following rate elements will all receive DCP rates:

Channel Mileage
Channel Mileage Termination
DS1 to Voice/Base Rate Multiplexer
Local Distribution Channel

/1/ DCP is not available for DS1 Local Distribution Channels (LDC) associated with 128, 256 and 384 Kbps Channel Mileage Termination and Channel Mileage, installed after January 26, 2001.
/2/ Effective on September 13, 2017, 5-year DCP Payment Plans for DS1 Service are no longer available, and DCP Payment Plans for Direct Analog and Base Rate Services are no longer available. Circuits already subject to a DCP Payment Plan, as of September 13, 2017, will continue to be provided under the then-current DCP term for the remainder of that term.
/3/ Effective September 9, 2020, this Service will no longer be available for purchase by new or existing customers, and service agreements may no longer be renewed. In addition, requests to move, add or change existing service arrangements will not be accepted. Following the expiration of a customer's existing term agreement, service will be provided on a month-to-month basis at the applicable monthly extension rates until the service is discontinued. AT&T currently plans to discontinue this Service on or after June 30, 2024.
/4/ Effective November 1, 2022, DS1 and DS3 Optional Payment Plan Services, 24- and 36-month plans, and DS1 Discount Commitment Plan, 36-month plans (collectively, Term Plan Services), are no longer available, including conversions. Existing Term Plan Services, as of November 1, 2022, will continue to be provided under the then-current terms, for the remainder of the applicable term. (N)

ACCESS SERVICE

7. Special Access Service

7.4 Rate Regulations (Cont'd)

7.4.13 Discount Commitment Program (DCP)/1//2/ (C)

(B) (Cont'd)

(1) Commitment Level (Cont'd)

Only rate elements not purchased under an Optional Payment Plan (described in Section 7.4.9) will be eligible for inclusion in the commitment level and for DCP rates. After establishing the DCP commitment level, customers may continue to order new services under Monthly or OPP arrangements, without portability, or under the DCP with portability, but only LDCs purchased under the DCP will count toward meeting the DCP commitment level.

As long as a customer's actual in service level of Local Distribution Channels is at the commitment level, customers will be billed DCP rate for all eligible rate elements. Additionally, if a customer's in service level exceeds the initial in service level by no more than 30 percent for a three year DCP or 50 percent for a 5 year DCP, customers will be billed the DCP rates for all eligible rate elements. For example, a customer with 100 Base Rate LDCs commits 90 LDCs (or 90 percent) to a 3 year DCP term. The customer will be billed DCP rates as long as the actual in service level of Base Rate LDCs is greater than or equal to 90 or less than 130.

If a customer's in service level exceeds the initial in service level by more than 30 percent for a three year term or 50 percent for a 5 year term, the customer will be billed the monthly rate for all LDCs above the commitment level. For example, a customer with 100 Base Rate LDCs that commits 90 (or 90 percent) LDCs to a 3 year DCP actually has 140 LDCs in service. This customer will be billed DCP rates for 90 LDCs but monthly rates for the 50 LDCs above the commitment level.

If a customer's actual in service level falls below the commitment level, the customer will be billed for the commitment level of LDCs at DCP rates. For example, a customer that commits 90 LDCs but only has 70 LDCs in service will be billed the DCP rates for 90 LDCs.

In all cases, applicable associated rate elements (excluding the LDCs) for the service covered by a DCP term, will receive DCP rates even when the actual in service level of Local Distribution Channels is outside the DCP parameters, as described above.

/1/ DCP is not available for DS1 Local Distribution Channels (LDC) associated with 128, 256 and 384 Kbps Channel Mileage Termination and Channel Mileage, installed after January 26, 2001.

/2/ Effective November 1, 2022, DS1 and DS3 Optional Payment Plan Services, 24- and 36-month plans, and DS1 Discount Commitment Plan, 36-month plans (collectively, Term Plan Services), are no longer available, including conversions. Existing Term Plan Services, as of November 1, 2022, will continue to be provided under the then-current terms, for the remainder of the applicable term. (N) (N)

ACCESS SERVICE

7. Special Access Service

7.4 Rate Regulations (Cont'd)

7.4.13 Discount Commitment Program (DCP)[1] (Cont'd)

(B) (Cont'd)

(2) 90 Day Review Period

No adjustments, for being above or below commitment level (as described in (B) above), in monthly billing for a DCP will take place until 90 days after Telephone Company notification to the customer that the commitment level has been exceeded or not been met. This will insure that customers will not be penalized for aberrations in Local Distribution Channel counts caused by timing differentials in disconnection and installation.

Customers' bills will not be adjusted for being outside the parameters described in 7.4.13(B), preceding during the 90 day review period. Additionally, customers will continue to be billed the adjustments (following the 90 day review period) for being outside the described parameters until the commitment level is met or increased. A new 90 day review period will be initiated if the customer's actual in service level subsequently falls outside the described parameters.

(3) Increasing the DCP Commitment Level

Customers may increase their commitment level at any time by notifying the Telephone Company in writing. An increase in the commitment level will not change the expiration date of the DCP.

When a commitment level is increased, the actual in service LDC level at the time of the increase will be used to calculate billing adjustments as described in Section 7.4.13(B), preceding.

(4) Decreasing the DCP Commitment Level and Termination Liabilities

Customers may only decrease their commitment level by paying termination liability charges on the number of Local Distribution Channels by which the commitment level is decreased. Termination Liabilities will apply to Direct Analog[2], OPTINET Base Rate and DS1 services covered by a DCP. For example, a customer has a commitment level of 90 LDCs. The customer then decreases this commitment level to 70 LDCs. The customer must pay termination liabilities on 20 LDCs. (N)

[1] DCP is not available for DS1 Local Distribution Channels (LDC) associated with 128, 256 and 384 Kbps Channel Mileage Termination and Channel Mileage, installed after January 26, 2001.

[2] Effective September 9, 2020, this Service will no longer be available for purchase by new or existing customers, and service agreements may no longer be renewed. In addition, requests to move, add or change existing service arrangements will not be accepted. Following the expiration of a customer's existing term agreement, service will be provided on a month-to-month basis at the applicable monthly extension rates until the service is discontinued. AT&T currently plans to discontinue this Service on or after June 30, 2024. (N) (N)

7. Special Access Service

7.4 Rate Regulations (Cont'd)

7.4.13 Discount Commitment Program (DCP)/1//2/ (C)

(B) (Cont'd)

(4) Decreasing the DCP Commitment Level and Termination Liabilities (Cont'd)

The Termination Liability for DCP is calculated to be the dollar difference between the current DCP rate for the DCP term that could have been completed during the time the service was actually in service, or the monthly rate for services in place less than 36 months, and the customer's current DCP rate for each month the service was provided.

For example, a customer subscribing to a 60 month DCP term reduced their LDC commitment by 20 LDCs during the 37th month. This customer's termination charge would be:

20 LDCs x (36 month DCP rate - 60 month DCP rate) x 37 months = Termination Charge

Termination Liability charges will not apply to individual Local Distribution Channels disconnected or moved within a state as long as the commitment level is maintained. Normal nonrecurring charges will apply.

A decrease in the commitment level will not change the expiration date of the DCP.

(C) For DCPs established on or after September 10, 2016, the terms and conditions associated with the DCP are as follows in this Section 7.4.13(C):

(1) Customer commits to a 3- or 5-Year Commitment Level (CL) that is reviewed on a monthly basis by the Telephone Company. To begin the process of establishing a DCP, Customer must request from the Telephone Company a list of DS1 circuits with LDCs for all of the ACNAs of Customer and any entities that are then affiliated companies of Customer. Customer must designate from the provided list which DS1 circuits with LDCs are to be included in, and which are to be excluded from, its DCP and return the list with those designations to the Telephone Company. Failure to provide a designation for a listed circuit will be deemed to be a designation that such circuit is to be excluded from its Portability Commitment.

Only those DS1 circuits with LDCs that are designated as being included ("Designated Circuits") will be subject to the DCP.

The Customer's initial CL is the total number of LDCs associated with Designated Circuits. Although the CL is based upon LDCs, the following rate elements will all receive DCP rates: Channel Mileage, Channel Mileage Termination, DS1 to Voice/Base Rate Multiplexer, and LDCs.

The effective date of the DCP will be the first day of the month immediately following the month in which the DCP commitment is signed.

(2) Customer must commit a minimum of 100 circuits with LDCs to establish a DCP.

(3) Customer, including all of its ACNAs and Affiliates, may be subject to only one DCP by service and by state at any time. An "Affiliate," as that term is used in connection with the DCP, is a person that (directly or indirectly) owns or controls, is owned or controlled by, or is under common ownership or control with, another person. For purposes of the prior sentence, "own" means to own an equity interest (or the equivalent thereof) of more than 10 percent.

(4) Designated Circuits that are disconnected during the term of the DCP will not incur Termination Liability charges.

/1/ DCP is not available for DS1 Local Distribution Channels (LDC) associated with 128, 256 and 384 Kbps Channel Mileage Termination and Channel Mileage, installed after January 26, 2001.

/2/ Effective November 1, 2022, DS1 and DS3 Optional Payment Plan Services, 24- and 36-month plans, and DS1 Discount Commitment Plan, 36-month plans (collectively, Term Plan Services), are no longer available, including conversions. Existing Term Plan Services, as of November 1, 2022, will continue to be provided under the then current terms, for the remainder of the applicable term. (N) (N)

7. Special Access Service

7.4 Rate Regulations (Cont'd)

7.4.13 Discount Commitment Program (DCP)/1/

(C) (Cont'd)

(5) Customer may add additional circuits with LDCs to the DCP during the term of the DCP only when initially ordering such circuits. A circuit that is so added will be considered a Designated Circuit.

(6) During the monthly review of Customer's Designated Circuits and its CL, the Telephone Company will determine whether Customer met, did not meet, or exceeded its CL as of the last day of the month being reviewed.

If Customer did not meet its CL, Customer will be billed for the CL of LDCs at DCP rates.

If Customer exceeds its CL by 115 percent or greater for three consecutive months, Customer's CL will be increased to ninety percent (90%) of the average number of LDCs associated with Designated Circuits for those three months.

Example: Customer's CL is 100 LDCs. For three consecutive months during the DCP term, the Customer's LDC volumes are 118, 120 and 122, for an average of 120. The Customer's new CL will be:

((118+120+122)/(3)) x (90%) = 108

(7) If Customer elects to terminate the DCP or elects to decrease the CL prior to expiration of the 3- or 5-Year commitment, Customer will be billed a Termination Liability charge. The Termination Liability charge is calculated to be the dollar difference between the current DCP LDC rate for the DCP term that could have been completed during the time the LDC was actually in service, or the LDC monthly rate for LDCs in place less than 36 months, and the customer's then-current DCP LDC rate for each month the service was provided.

Example: Customer subscribes to a 60-month DCP term and reduces its LDC commitment by 20 LDCs during the 37th month. Customer's Termination Liability charge will be:

(20 LDCs) x (36 month DCP rate - 60 month DCP rate) x (37 months)
= Termination Liability charge

/1/ DCP is not available for DS1 Local Distribution Channels (LDC) associated with 128, 256 and 384 Kbps Channel Mileage Termination and Channel Mileage, installed after January 26, 2001.

7. Special Access Service (Cont'd)

7.4 Rate Regulations (Cont'd)

7.4.13 Discount Commitment Program (DCP) (Cont'd)/1//4/ (C)

(D) Upgrading a DCP Service

When a customer upgrades a Direct Analog(3) or Base Rate service being billed DCP rates to a DS1 service, the Direct Analog(3) or Base Rate DCP commitment level will be reduced at the customer's request (up to a maximum of 24) and no termination liabilities will apply. If the customer has a DCP for DS1, the DS1 DCP commitment level will be increased if the customer requests that it be increased. When a customer upgrades a DS1 service being billed DCP rates to a higher speed service with the same termination points, the customer's DS1 DCP commitment level will be reduced at the customer's request and no termination liabilities will apply.

(F) Conversion to an Optional Payment Plan (OPP)(2)

Customers may convert services from a DCP term to an OPP as described in 7.4.10, preceding. No termination liabilities will apply to services converted to an OPP term of the same or longer length than the DCP term. Additionally, the customer's DCP commitment level will be reduced by the number of LDCs, associated with the service, converted to an OPP term.

/1/ DCP is not available for DS1 Local Distribution Channels (LDC) associated with 128, 256 and 384 Kbps Channel Mileage Termination and Channel Mileage, installed after January 26, 2001.

/2/ For DCPs established on or after September 10, 2016, moves from OPP to DCP are not allowed.

/3/ Effective September 9, 2020, this Service will no longer be available for purchase by new or existing customers, and service agreements may no longer be renewed. In addition, requests to move, add or change existing service arrangements will not be accepted. Following the expiration of a customer's existing term agreement, service will be provided on a month-to-month basis at the applicable monthly extension rates until the service is discontinued. AT&T currently plans to discontinue this Service on or after June 30, 2024.

/4/ Effective November 1, 2022, DS1 and DS3 Optional Payment Plan Services, 24- and 36-month plans, and DS1 Discount Commitment Plan, 36-month plans (collectively, Term Plan Services), are no longer available, including conversions. Existing Term Plan Services, as of November 1, 2022, will continue to be provided under the then current terms, for the remainder of the applicable term. (N) | (N)

7. Special Access Service (Cont'd)

7.4 Rate Regulations (Cont'd)

7.4.14 Network Reconfiguration Service (NRS)/1/

This section contains specific regulations governing the rates and charges that apply for Network Reconfiguration Service.

(A) Types of Rates and Charges

(1) Monthly Rates

(a) NRS Service Charge (Ability to Reconfigure Networks)

The NRS Service Charge is a monthly recurring rate that is applied per customer network database that gives the customer the ability to reconfigure their network.

(b) NRS Access Arrangement

The NRS Access Arrangement charge applies for each Dedicated Access Network Link or dial-in access number that the customer uses to access NRS. The Access Arrangement provides the interface between the customer and the NRS System Locations. Dedicated Network Access Links (DNALs) or dial-in access should be purchased from the applicable intrastate or interstate tariffs. This option may be utilized with a compatible DNAL as specified in Section 8.3.1(E). An Access Arrangement must be purchased for each Dedicated Network Access Link or dial-in number used to access the NRS system to request reconfigurations.

/1/ Effective December 5, 2018, Network Reconfiguration Service (NRS) will no longer be available for purchase by new or existing customers, and NRS service agreements may no longer be renewed. Effective July 31, 2022, the Telephone Company will no longer accept new requests for physical changes to existing service arrangements including the upgrade or downgrade of access/port speed, installation of new service, or moves to different service addresses.

ACCESS SERVICE

7. Special Access Service (Cont'd)

7.4 Rate Regulations (Cont'd)

7.4.14 Network Reconfiguration Service (NRS) (Cont'd)/1/

(A) Types of Rates and Charges (Cont'd)

(2) Nonrecurring Charges

(a) NRS Service Charge (Ability to Reconfigure Networks)

There is a nonrecurring charge for initially establishing the customer network database. The network database will contain all facilities and channels that a customer will be able to reconfigure.

(b) NRS Database Modification

The Database Modification charge applies to customer initiated changes to their network database subsequent to the initial database setup. These changes include:

(1) Addition or deletion of channel/facility terminations at the NRS system location.

(2) Addition, deletion or change in the customer's master security password.

(3) Establish cross-connection of two NRS subscribers located at the same NRS location. Letters of Authorization must be submitted by both customers to the Telephone Company before the modification is made.

Discontinuance of the above arrangement will also generate a modification charge.

This charge applies to each change to a customer's database. If more than one change is requested at the same time, the charge is applied to each change requested.

/1/ Effective December 5, 2018, Network Reconfiguration Service (NRS) will no longer be available for purchase by new or existing customers, and NRS service agreements may no longer be renewed. Effective July 31, 2022, the Telephone Company will no longer accept new requests for physical changes to existing service arrangements including the upgrade or downgrade of access/port speed, installation of new service, or moves to different service addresses.

7. Special Access Service (Cont'd)

7.4 Rate Regulations (Cont'd)

7.4.14 Network Reconfiguration Service (NRS) (Cont'd)/1/

(A) Types of Rates and Charges (Cont'd)

(2) Nonrecurring Charges (Cont'd)

(c) NRS Access Arrangement

There is a nonrecurring charge associated with the initial installation of the arrangement.

(d) Attendant Access

Attendant Access provides for reconfiguration activities to be performed by a Telephone Company attendant at the direction of the customer. The customer may request that the commands be performed on demand or at a later, scheduled time. On demand requests will normally be executed by the attendant within one hour of the customer's request. Attendant Access cannot be purchased independently but is available to customer's that access NRS either through a dial-in or dedicated arrangement.

The Attendant Access charge is charged on the first 30 minutes of use and subsequent 15 minute increments.

(e) NRS Training

The NRS training charge provides for additional training requested by the customer beyond the training session included with the initial installation of the NRS service.

The customer may request additional training on an hourly basis to be provided at a location agreed upon by the Telephone Company and the customer.

/1/ Effective December 5, 2018, Network Reconfiguration Service (NRS) will no longer be available for purchase by new or existing customers, and NRS service agreements may no longer be renewed. Effective July 31, 2022, the Telephone Company will no longer accept new requests for physical changes to existing service arrangements including the upgrade or downgrade of access/port speed, installation of new service, or moves to different service addresses.

ACCESS SERVICE

7. Special Access Service (Cont'd)
7.4 Rate Regulations (Cont'd)
7.4.14 Network Reconfiguration Service NRS (Cont'd)[1]
(B) Service Configuration

The following diagram depicts Network Reconfiguration Service (NRS) utilized with DS1 and Base Rate and Direct Analog Services[2]. (N)

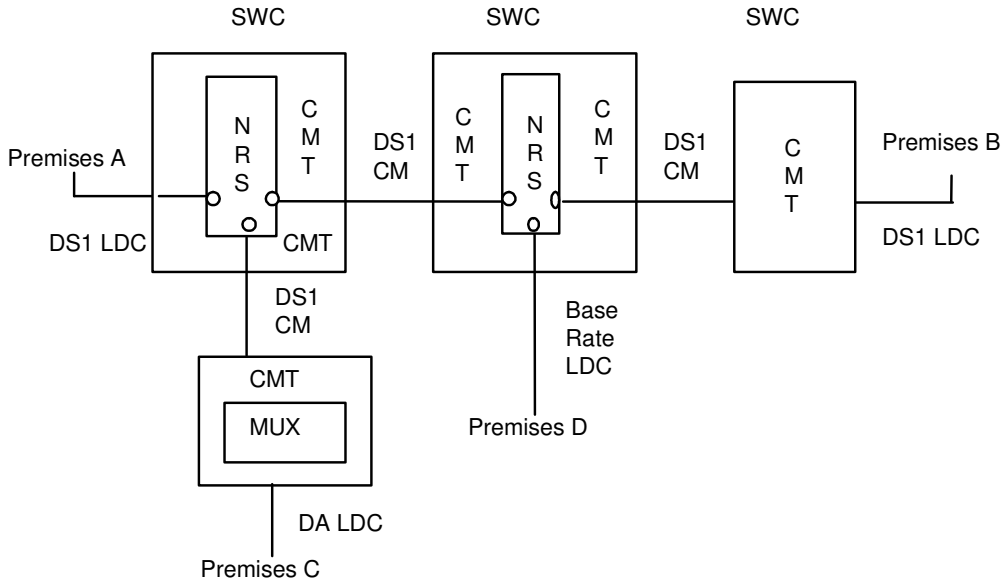

LDC	-	Local Distribution Channel
CMT	-	Channel Mileage Termination
CM	-	Channel Mileage
SWC	-	Serving Wire Center
MUX	-	Multiplexer
NRS	-	NRS System Location
o	-	NRS Port Termination
DA	-	Direct Analog[2] (N)

Applicable rate elements are:
- Local Distribution Channels, 2 DS1, 1 Base Rate, 1 Direct Analog
- Channel Mileage Terminations - 6 DS1
- Channel Mileage - 3 DS1 mileages
- NRS Port Terminations - 5 DS1, 1 Ameritech Base Rate
- Multiplexing - 1 DS1 to Base Rate/Direct Analog
- Appropriate NRS Basic Service and ACCESS rate elements

[1] Effective December 5, 2018, Network Reconfiguration Service (NRS) will no longer be available for purchase by new or existing customers, and NRS service agreements may no longer be renewed. Effective July 31, 2022, the Telephone Company will no longer accept new requests for physical changes to existing service arrangements including the upgrade or downgrade of access/port speed, installation of new service, or moves to different service addresses.

[2] Effective September 9, 2020, this Service will no longer be available for purchase by new or existing customers, and service agreements may no longer be renewed. In addition, requests to move, add or change existing service arrangements will not be accepted. Following the expiration of a customer's existing term agreement, service will be provided on a month-to-month basis at the applicable monthly extension rates until the service is discontinued. AT&T currently plans to discontinue this Service on or after June 30, 2024. (N)

7. Special Access Service (Cont'd)

7.4 Rate Regulations (Cont'd)

7.4.15 Installation Interval Guarantee

A failure to meet the confirmed due date provided by the Telephone Company for the services following, will result in a customer credit as shown below, where the responsibility for the failure is the Telephone Company's:

Services	Credit Amount
Direct Analog Service[1]	$200.00
Base Rate	250.00
DS1	350.00
DS3	600.00

(N)

This guarantee does not apply to any installation involving the following circumstances:

1. The customer requests expedited orders
2. Other Telephone Companies are designated as the billing company as set forth in Section 2.4.7 preceding or the AOC is the billing company as set forth in 2.4.7(B)(3) and 2.4.7(B)(4) preceding.
3. The customer's premises is inaccessible
4. The customer changes interface requirements
5. The customer is not ready to accept service
6. Building facilities are not ready (includes space, cable support structures, building risers and entrance facilities to be provided by builder or owner or owner's subcontracted vendors)
7. The customer orders termination beyond the Network Interface
8. The nonrecurring installation charges (Design and Central Office and Customer Connection) are waived or zero rated
9. The delay is caused by civil disturbances, criminal actions, work stoppages, by fire, flooding or other occurrence attributed to an Act of God or any other circumstance beyond the Telephone Company's reasonable control

[1] Effective September 9, 2020, this Service will no longer be available for purchase by new or existing customers, and service agreements may no longer be renewed. In addition, requests to move, add or change existing service arrangements will not be accepted. Following the expiration of a customer's existing term agreement, service will be provided on a month-to-month basis at the applicable monthly extension rates until the service is discontinued. AT&T currently plans to discontinue this Service on or after June 30, 2024. (N)

7. Special Access Service (Cont'd)

7.4 Rate Regulations (Cont'd)

7. Special Access Service (Cont'd)

7.4 Rate Regulations (Cont'd)

7. Special Access Services (Cont'd)

7.4 Rate Regulations (Cont'd)

7. Special Access Services (Cont'd)

7.4 Rate Regulations (Cont'd)

7. Special Access Service (Cont'd)

7.4 Rate Regulations (Cont'd)

7.4.17 Multiplexer Cross-Connection

Multiplexer Cross-Connection (MCC) will be charged per cross-connect per central office, where the cross-connection is performed. If MCC is provided between two Telephone Company offices where multiplexing is performed, Channel Mileage and Channel Mileage Terminations for the lower speed service will apply between the two central offices along with one MCC charge per cross-connect per central office.

When one service is cross-connected to another service, the two cross-connected services are treated separately for service performance measurement and service interruption credit purposes.

If two Customers are involved, The Host Subscriber will be responsible for the entire billing of MCC. The Service User must submit to the Telephone Company with the DS1 and/or DS3 system and channel assignment information for the lower speed services being cross-connected. Additionally, the Service User must: (i) obtain a letter of authorization from the Host Subscriber, and (ii) provide a written copy of the letter of authorization to the Telephone company if a dispute arises with respect to the authorization for the applicable Services.

7. Special Access Service (Cont'd)

7.4 Rate Regulations (Cont'd)

7.4.18 Nonrecurring Charge (NRC) Waiver

The NRC Waiver is a one time offering that for a limited period of time waives certain nonrecurring installation and service rearrangement charges for DS1, DS3 and Synchronous Optical Network (SONET) based services, i.e., OC-3, OC-12, OC-48, Dedicated Ring Services/1/, etc. (C)

Nonrecurring charges, including any associated Administrative, Design and Central Office Connection Charges and Customer Connection Charges will be waived only for orders requesting the following:

(a) Installation of all SONET based services.

(b) Installation of a new DS1 or DS3 service for connection to a new or existing SONET based service.

(c) Rehoming an existing DS1 or DS3 service to a new or existing SONET based service.

The NRC Waiver will be available from November 1, 1995, until January 31, 1996.

The NRC Waiver will apply to any orders for service received between November 1, 1995 and January 31, 1996, with a due date no later than April 1, 1996.

/1/ Effective on or after December 1, 2021, neither new nor existing customers will be permitted to purchase new OC3, OC12, OC48 and OC192 Dedicated Ring Service (Service). In addition, (A) Service Payment Plans greater than 12-months in length will no longer be available; and (B) requests to move, add, change, upgrade, or downgrade existing Service arrangements will not be accepted, with the following exceptions: (1) existing customers will be permitted to modify their existing Service and will be able to add new circuits to their existing Service, but will not be permitted to add new nodes in any locations; and (2) any such new circuits will be subject to the customer's existing term payment plan or term agreement for the Service to which they are added. Following the expiration of a customer's existing term agreement, Service will be provided on a month-to-month basis at the applicable Monthly rates until the Service is discontinued. (N)
Effective November 30, 2023, unless specified to the contrary in their existing Service agreements, existing customers may not renew Term Payment Plans or term agreements for Service. In addition, no move, add, or change orders of any type will be accepted. (N)

7. Special Access Service (Cont'd)

7.4 Rate Regulations (Cont'd)

7.4.19 Shared Facility Credit/Shared Facility Channel Service

DS3 Service customers who allow the Telephone Company use of their Ameritech-provided DS3 service for the provision of Shared Facility Channel Service to other Telephone Company customers may elect to receive a credit for that portion of the DS3 service used to provide the Shared Facility Channel Service. The credit will be based on the DS1 capacity of the DS3 service components (i.e., 1/28th of the monthly rates for a DS3 LDC with an Electrical Interface, DS3 Service Package with an Optical Interface and the DS3 Service Channel, DS3 to DS1 Multiplexer and, if appropriate, DS3 Channel Mileage Terminations and Channel Mileage). For DS3 LDCs with an Electrical Interface, the SFC will be calculated after application of Volume Pricing Plan discounts as described in 7.4.10 I preceding. In any month, the total SFC for any DS3 service element shall not exceed 100 percent of the monthly rate for the element.

The following terms and conditions apply to all DS3 Shared Facility Credit/Shared Facility Channel Service arrangements.

(A) The customer of the DS3 service cannot be the same as the customer of the Shared Facility Channel Service.

(B) The Telephone Company and the DS3 customer must agree to work cooperatively to maintain accurate customer records of any SFC arrangements. The customer records which must be jointly maintained are:

- connecting facility assignments by Shared Facility Channel customer and
- additions, moves, or deletions of Shared Facility Channel customers onto or off of the DS3 service.

If the DS3 customer does not cooperate to maintain these customer records, the existing affected SFC arrangement(s) will be discontinued and additional SFC arrangements will not be established.

(C) SFC can be established on Special Access DS3s for connection to Special Access DS1s only. If a Shared Facility Service channel of a DS3 service becomes vacant subsequent to the establishment of a DS3 SFC arrangement (e.g., the DS1 customer disconnects service), SFC will be eliminated for that channel.

7. Special Access Service

7.4 Rate Regulations (Cont'd)

7.4.19 Shared Facility Credit/Shared Facility Channel Service (Cont'd)

(D) The Telephone Company will only remove a Shared Facility Channel Service customer from the DS3 SFC arrangement at the request of the DS3 customer or because the DS1 customer has discontinued service or moved service to a different transport facility. In the event the DS3 SFC arrangement is terminated without any physical change to the serving arrangement, the DS3 customer may request a Shared Network Arrangement, as described in Section 5.2 (A), preceding. In the event a Shared Network Arrangement is converted to an SFC arrangement without any physical change to the serving arrangement, the Shared Facility Channel Service nonrecurring charge will not apply.

(E) In the event, a billing dispute is initiated by a Shared Facility Channel Service customer, the Telephone Company will negotiate with the Shared Facility Channel Service customer as set forth in Section 2.4, preceding.

(F) The Telephone Company will accept requests to disconnect the DS3 service only from the DS3 service customer. The DS3 customer is responsible for notifying each DS1 customer utilizing a channel of the DS3 under a SFC arrangement. Notification must be completed no later than 10 business days before the DS3 is scheduled to be disconnected; otherwise, the DS3 may not be disconnected and billing of all services will continue.

(G) Each customer must agree to work cooperatively with the Telephone Company to ensure proper installation, testing, maintenance, and repair of the affected DS3 or DS1 service(s). The DS3 customer must immediately release its service and arrange for the immediate release, if necessary, of any other Shared Facility Channel Service riding that DS3 service, for repair purposes, when requested by the Telephone Company. Failure to release shall result in the immediate termination of the SFC arrangements for that service (DS3), and that customer being liable for any service credits that the Telephone Company may owe the DS3 or other Shared Facility Channel customer riding that DS3 service.

7. Special Access Service (Cont'd)

7.4 Rate Regulations (Cont'd)

7. Special Access Service (Cont'd)

7.4 Rate Regulations (Cont'd)

ACCESS SERVICE

7. Special Access Service (Cont'd)

7.5 Rates and Charges

Effective November 3, 2017, all rate elements, other than End User Local Distribution Channels and their applicable optional features[3] in Non-Competitive Counties, are no longer available from Section 7.5 for new service subscriptions. [2] The application of rates and charges for Special Access services is based upon the county classification as Competitive or Non-Competitive, as provided in Section 7.4. A list of Competitive and Non-Competitive Counties is located in Sections 14.2.3 and 14.2.4.

7.5.1 Metallic Service

		USOC	Monthly Rate
(A)	Local Distribution Channel - TNVG2 $17.90	Per point of termination	
(B)	Channel Mileage Termination[1] - Per point of mileage termination	CM6	None
(C)	Channel Mileage[1] - 1L5XX 9.46	Per mile	

[1] Metallic circuits beyond five miles are limited to existing circuits.
[2] Until February 1, 2018, End User Local Distribution Channels and their applicable optional features that had not qualified for Phase II, Level 2 pricing flexibility prior to June 1, 2017, will be rated at the price cap rate regardless of the status of the county in which the applicable wire center is located.
[3] Optional features for End User channel terminations includes all optional features in Section 7.5, except for the Transfer Arrangement and Network Reconfiguration Service.

7. Special Access Service (Cont'd)

7.5 Rates and Charges (Cont'd)

7. Special Access Service (Cont'd)

7.5 Rates and Charges (Cont'd)

7. Special Access Service (Cont'd)

7.5 Rates and Charges (Cont'd)

7. Special Access Service (Cont'd)

7.5 Rates and Charges (Cont'd)

7. Special Access Service (Cont'd)

7.5 Rates and Charges (Cont'd)

ACCESS SERVICE

7. Special Access Service (Cont'd)

7.5 Rates and Charges (Cont'd)

7.5.2 Telegraph Grade Service

		USOC	Monthly Rate
(A)	Local Distribution Channel		
	- Per point of termination		
	- Two-Wire	T6E2X	$32.83
	- Four-Wire	T6E4X	37.34
(B)	Channel Mileage Termination		
	- Per point of mileage termination	CM6	14.97
(C)	Channel Mileage		
	- Per mile	1L5XX	1.39

7. Special Access Service (Cont'd)

7.5 Rates and Charges (Cont'd)

7. Special Access Service (Cont'd)

7.5 Rates and Charges (Cont'd)

7. Special Access Service (Cont'd)

7.5 Rates and Charges (Cont'd)

7. Special Access Service (Cont'd)

7.5 Rates and Charges (Cont'd)

7. Special Access Service (Cont'd)

7.5 Rates and Charges (Cont'd)

ACCESS SERVICE

7. Special Access Service (cont'd)

7.5 Rates and Charges (cont'd)

7.5.3 Direct Analog Service

- **Rates and Charges for Direct Analog Service** /2/

	USOC	Monthly Rate	Discount Commitment Program 36 Months	Discount Commitment Program 60 Months
A. Local Distribution Channel				
1. Direct Analog Service				
- Per point of termination				
- Two-Wire	T6E2X	$22.40	$20.50	$20.00
- Four-Wire	T6E4X	30.00	26.00	25.00
2. Dedicated Access Line				
- Per point of termination/1/				
- Two Wire	X2W	22.40	20.50	20.00
- Four Wire	X4W	34.00	31.00	28.00
B. Channel Mileage Termination				
- Per point of mileage termination	CM6	13.00	11.50	10.00
C. Channel Mileage				
- Per mile	1L5XX	.90	.70	.65

	USOC	Monthly Rate	Nonrecurring Charge
D. Optional Features and Functions			
1. Bridging			
(a) Voice and DAL Bridging			
- Per Port			
- Two-Wire	BCNV2	$7.85	None
- Four-Wire	BCNV4	6.20	None

/1/ One Local Distribution Channel applies per Dedicated Access Line (DAL).

/2/ Effective on September 13, 2017, DCP Payment Plans for Direct Analog Service are no longer available. Circuits already subject to a DCP Payment Plan, as of September 13, 2017, will continue to be provided under the then-current DCP term for the remainder of that term.

ACCESS SERVICE

7. Special Access Service (cont'd)

7.5 Rates and Charges (cont'd)

7.5.3 Direct Analog Service (cont'd)

	USOC	Monthly Rate	Nonrecurring Charge
D Optional Features and Functions (cont'd)			
1. Bridging (cont'd)			
(b) Data Bridging Two-Wire/Four-Wire, Per Port			
- Two-Wire	BCND2	$5.75	None
- Four-Wire	BCND4	7.50	None

ICB rates and charges are filed in 7.6 following.

7. Special Access Service (Cont'd)

7.5 Rates and Charges (Cont'd)

7.5.3 Direct Analog Service (Cont'd)

	USOC	Monthly Rate	Nonrecurring Charge
(D) Optional Features and Functions (Cont'd)			
(**1**) Bridging (Cont'd)			

7. Special Access Service (cont'd)

7.5 Rates and Charges (cont'd)

7.5.3 Direct Analog Service[1] (cont'd) (N)

D. Optional Features and Functions (cont'd)

1. Conditioning
   - Per point of termination

	USOC	Monthly Rate	Nonrecurring Charge
C – Type	X1CPT	$ 5.10	None
Improved Attenuation Distortion	UHW	5.75	$ 77.55
Improved Envelope Delay Distortion	UHY	66.90	310.20
Sealing Current	1HBPT	None	None

[1] Effective September 9, 2020, this Service will no longer be available for purchase by new or existing customers, and service agreements may no longer be renewed. In addition, requests to move, add or change existing service arrangements will not be accepted. Following the expiration of a customer's existing term agreement, service will be provided on a month-to-month basis at the applicable monthly extension rates until the service is discontinued. AT&T currently plans to discontinue this Service on or after June 30, 2024. (N) (N)

ACCESS SERVICE

7. Special Access Service (cont'd)

7.5 Rates and Charges (cont'd)

7.5.3 Direct Analog Service[1] (cont'd) (N)

	USOC	Monthly Rate	Nonrecurring Charge
(D) Optional Features and Functions (cont'd)			
(3) Improved Return Loss for Effective Two-Wire Transmission			
- Per point of termination			
- Two-Wire	1RL2W	$ 2.35	None
(4) Improved Termination			
- Per point of termination			
- Four-Wire	CP6	2.05	None
(5) Customer Specified Receive Level			
- Per point of termination	RLS	.75	None
(6) Reserved for Future Use			
(7) Data Capability			
- Per point of termination	XDCPT	6.00	$310.20
(8) Reserved for Future Use			

[1] Effective September 9, 2020, this Service will no longer be available for purchase by new or existing customers, and service agreements may no longer be renewed. In addition, requests to move, add or change existing service arrangements will not be accepted. Following the expiration of a customer's existing term agreement, service will be provided on a month-to-month basis at the applicable monthly extension rates until the service is discontinued. AT&T currently plans to discontinue this Service on or after June 30, 2024. (N)

ACCESS SERVICE

7. Special Access Service (Cont'd)

7.5 Rates and Charges (Cont'd)

7.5.3 Direct Analog Service[1] (Cont'd) (N)

	USOC	Monthly Rate	Nonrecurring Charge
(D) Optional Features and Functions (Cont'd)			
(9) Signaling Capability			
- Per point of termination	XSS++	$2.00	None
- In lieu of ++, substitute appropriate two digit code from following list to specify type of signaling.			
AB			
AC			
AH			
CT			
DS			
DX			
DY			
EA			
EB			
EC			
EX			
GO			
GS			
LA			
LB			
LC			
LO			
LR			
LS			
RV			
SE			
SF			

[1] Effective September 9, 2020, this Service will no longer be available for purchase by new or existing customers, and service agreements may no longer be renewed. In addition, requests to move, add or change existing service arrangements will not be accepted. Following the expiration of a customer's existing term agreement, service will be provided on a month-to-month basis at the applicable monthly extension rates until the service is discontinued. AT&T currently plans to discontinue this Service on or after June 30, 2024. (N) (N)

ACCESS SERVICE

7. Special Access Service (Cont'd)

7.5 Rates and Charges (Cont'd)

7.5.3 Direct Analog Service[1] (Cont'd) (N)

	USOC	Monthly Rate	Nonrecurring Charge
(D) Optional Features and Functions (Cont'd)			
(10) Reserved for Future Use			
(11) Reserved for Future Use			

[1] Effective September 9, 2020, this Service will no longer be available for purchase by new or existing customers, and service agreements may no longer be renewed. In addition, requests to move, add or change existing service arrangements will not be accepted. Following the expiration of a customer's existing term agreement, service will be provided on a month-to-month basis at the applicable monthly extension rates until the service is discontinued. AT&T currently plans to discontinue this Service on or after June 30, 2024. (N)

ACCESS SERVICE

7. Special Access Service (Cont'd)

7.5 Rates and Charges (Cont'd)

7.5.3 Direct Analog Service[1] (Cont'd) (N)

	USOC	Monthly Rate	Nonrecurring Charge
(D) Optional Features and Functions (Cont'd)			
(12) DAL Improved Voice Transmission Improved Two-Wire transmission specifications - Per two-wire point of termination	X2T	None	None
(13) Line-Powered Data Station Termination Unit (Available with VG-6) - Per Point of Termination	LUN	$ 7.97	None
(14) DS0 Fiber Hub Cross-Connection Direct Analog to Direct Analog[1] (N)			
1 Day Notice	CX901	None	$206.80
3 Days Notice	CX903	None	$155.10

[1] Effective September 9, 2020, this Service will no longer be available for purchase by new or existing customers, and service agreements may no longer be renewed. In addition, requests to move, add or change existing service arrangements will not be accepted. Following the expiration of a customer's existing term agreement, service will be provided on a month-to-month basis at the applicable monthly extension rates until the service is discontinued. AT&T currently plans to discontinue this Service on or after June 30, 2024. (N) (N)

7. Special Access Service (Cont'd)

7.5 Rates and Charges (Cont'd)

7. Special Access Service (Cont'd)

7.5 Rates and Charges (Cont'd)

7. Special Access Service (Cont'd)

7.5 Rates and Charges (Cont'd)

7. Special Access Service (Cont'd)

7.5 Rates and Charges (Cont'd)

7. Special Access Service (Cont'd)

7.5 Rates and Charges (Cont'd)

7. Special Access Service (Cont'd)

7.5 Rates and Charges (Cont'd)

7. Special Access Service (Cont'd)

7.5 Rates and Charges (Cont'd)

7. Special Access Service (Cont'd)

7.5 Rates and Charges (Cont'd)

7. Special Access Service (Cont'd)

7.5 Rates and Charges (Cont'd)

7. Special Access Service (Cont'd)

7.5 Rates and Charges (Cont'd)

7. Special Access Service (Cont'd)

7.5 Rates and Charges (Cont'd)

7. Special Access Service (Cont'd)

7.5 Rates and Charges (Cont'd)

7. Special Access Service (Cont'd)

7.5 Rates and Charges (Cont'd)

7. Special Access Service (Cont'd)

7.5 Rates and Charges (Cont'd)

7. Special Access Service (Cont'd)

7.5 Rates and Charges (Cont'd)

7. Special Access Service (Cont'd)

7.5 Rates and Charges (Cont'd)

7. Special Access Service (Cont'd)

7.5 Rates and Charges (Cont'd)

7. Special Access Service (Cont'd)

7.5 Rates and Charges (Cont'd)

7. Special Access Service (Cont'd)

7.5 Rates and Charges (Cont'd)

7. Special Access Service (Cont'd)

7.5 Rates and Charges (Cont'd)

7. Special Access Service (Cont'd)

7.5 Rates and Charges (Cont'd)

7. Special Access Service (Cont'd)

7.5 Rates and Charges (Cont'd)

7. Special Access Service (Cont'd)

7.5 Rates and Charges (Cont'd)

7. Special Access Service (Cont'd)

7.5 Rates and Charges (Cont'd)

7. Special Access Service (Cont'd)

7.5 Rates and Charges (Cont'd)

7. Special Access Service (Cont'd)

7.5 Rates and Charges (Cont'd)

7. Special Access Service (Cont'd)

7.5 Rates and Charges (Cont'd)

7. Special Access Service (Cont'd)

7.5 Rates and Charges (Cont'd)

7. Special Access Service (Cont'd)

7.5 Rates and Charges (Cont'd)

7. Special Access Service (Cont'd)

7.5 Rates and Charges (Cont'd)

7. Special Access Service (Cont'd)

7.5 Rates and Charges (Cont'd)

7. Special Access Service (Cont'd)

7.5 Rates and Charges (Cont'd)

7. Special Access Service (Cont'd)

7.5 Rates and Charges (Cont'd)

7. Special Access Service (Cont'd)

7.5 Rates and Charges (Cont'd)

7. Special Access Service (Cont'd)

7.5 Rates and Charges (Cont'd)

7. Special Access Service (Cont'd)

7.5 Rates and Charges (Cont'd)

7. Special Access Service (Cont'd)

7.5 Rates and Charges (Cont'd)

7. Special Access Service (Cont'd)

7.5 Rates and Charges (Cont'd)

7. Special Access Service (cont'd)

7.5 Rates and Charges (cont'd)

7.5.4 Reserved For Future Use (T)

(D)

(D)

7. Special Access Service (Cont'd)

7.5 Rates and Charges (Cont'd)

7.5.4 Reserved For Future Use (T)

(D)

(D)

7. Special Access Service (Cont'd)

7.5 Rates and Charges (Cont'd)

7. Special Access Service (Cont'd)

7.5 Rates and Charges (Cont'd)

7. Special Access Service (Cont'd)

7.5 Rates and Charges (Cont'd)

7. Special Access Service (Cont'd)

7.5 Rates and Charges (Cont'd)

7. Special Access Service (Cont'd)

7.5 Rates and Charges (Cont'd)

7. Special Access Service (Cont'd)

7.5 Rates and Charges (Cont'd)

7. Special Access Service (Cont'd)

7.5 Rates and Charges (Cont'd)

7. Special Access Service (Cont'd)

7.5 Rates and Charges (Cont'd)

7. Special Access Service (Cont'd)

7.5 Rates and Charges (Cont'd)

7. Special Access Service (Cont'd)

7.5 Rates and Charges (Cont'd)

ACCESS SERVICE

7. Special Access Service (cont'd)

7.5 Rates and Charges (cont'd)

7.5.5 Video Service (cont'd)

	USOC	Daily	Monthly	12 Mo.	24 Mo.	36 Mo.	48 Mo.	60 Mo.
(A) TV Analog Video Service/1/								
(1) Local Distribution Channel								
- Per Point of Termination								
- TV-1 or 2	TMEV1	$250.00	$335.00	$320.00	$300.00	$290.00	$270.00	$250.00
(2) Channel Mileage Termination								
- Per point of mileage termination	CM6	30.72	30.00	20.00	17.00	15.00	14.00	13.00

(C)

/1/ Effective December 31, 2020, this Service will no longer be available for purchase by new or existing customers, and service agreements may no longer be renewed. In addition, requests to move, add, or change existing service arrangements will not be accepted. Following the expiration of a customer's existing term agreement, service will be provided on a month-to-month basis at the applicable Monthly rate until the service is discontinued. AT&T currently plans to discontinue this Service on or after December 31, 2021. (N) (N)

ACCESS SERVICE

7. Special Access Service (Cont'd)

7.5 Rates and Charges (Cont'd)

7.5.5 Video Service (Cont'd)

(A) TV Analog Video Service/1/ (Cont'd) (C)

(2) Channel Mileage Termination (Cont'd)

	USOC	Hourly
(b) Video Hub-to-Video Hub		
- Per point of mileage termination		
- All States	NRBVC	$0.85

	USOC	Daily	Monthly	12 Mo.	24 Mo.	36 Mo.	48 Mo.	60 Mo.
(3) Channel Mileage								
(a) Per Mile								
- All States								
	1L5XX	$23.57	$65.00	$60.00	$60.00	$60.00	$60.00	$60.00

	USOC	Hourly	Monthly
(b) Video Hub-to-Video Hub			
- Per Mile			
- All States	NRBVB	$2.40	
(4) Optional Features and Functions			
3rd and 4th Audio Channels	VAFAX		$50.00

/1/ Effective December 31, 2020, this Service will no longer be available for purchase by new or existing customers, and service agreements may no longer be renewed. In addition, requests to move, add, or change existing service arrangements will not be accepted. Following the expiration of a customer's existing term agreement, service will be provided on a month-to-month basis at the applicable Monthly rate until the service is discontinued. AT&T currently plans to discontinue this Service on or after December 31, 2021. (N) (N)

7. Special Access Service (cont'd)

7.5 Rates and Charges (cont'd)

7.5.5

7. Special Access Service (Cont'd)

7.5 Rates and Charges (Cont'd)

7. Special Access Service (Cont'd)

7.5 Rates and Charges (Cont'd)

7. Special Access Service (Cont'd)

7.5 Rates and Charges (Cont'd)

7.5.5 Video Service (Cont'd)

(D) Reserved for Future Use

7. Special Access Service (Cont'd)

7.5 Rates and Charges (Cont'd)

7.5.5 Video Service (Cont'd)

(D) Reserved for Future Use

7. Special Access Service (Cont'd)

7.5 Rates and Charges (Cont'd)

7.5.5 Video Service (Cont'd)

(D) Reserved for Future Use

7. Special Access Service (Cont'd)

7.5 Rates and Charges (Cont'd)

7.5.5 Video Service (Cont'd)

(E) Reserved for Future Use

7. Special Access Service (Cont'd)

7.5 Rates and Charges (Cont'd)

7.5.5 Video Service (Cont'd)

(E) Reserved for Future Use

ACCESS SERVICE

7. Special Access Service (cont'd)

7.5 Rates and Charges (cont'd)

7.5.5 Video Service (cont'd)

(F) Serial Component Video Service (SCVS)

			Recurring Charges Optional Payment Plan				
	USOC	Monthly	12 Mo.	24 Mo.	36 Mo.	48 Mo.	60 Mo.
(1) Local Distribution Channel							
(a) SCVS Standard (270 Mbps) - Per Point of Termination	T7TXX	$ 435.00	$ 435.00	$ 420.00	$ 410.00	$ 405.00	$ 390.00
(b) SCVS Optional (45 Mbps) - Per Point of Termination	TJ57X	2,000.00	1,900.00	1,825.00	1,750.00	1,700.00	1,650.00
(2) Channel Mileage Termination - Per Point of Mileage Termination	CM6	45.00	35.00	30.00	25.00	20.00	17.00
(3) Channel Mileage - Per Mile	1L5XX	65.00	65.00	60.00	60.00	58.00	55.00
(4) Optional Features and Functions							
(a) Video Regenerator - Per Each Regenerator	V8R	373.00	373.00	369.00	364.00	358.00	352.00

7. Special Access Service (Cont'd)

7.5 Rates and Charges (Cont'd)

7. Special Access Service (Cont'd)

7.5 Rates and Charges (Cont'd)

7.5.6 Reserved for Future Use

7. Special Access Service (Cont'd)

7.5 Rates and Charges (Cont'd)

7.5.6 Reserved for Future Use

7. Special Access Service (Cont'd)

7.5 Rates and Charges (Cont'd)

7.5.6 Reserved for Future Use

7. Special Access Service (Cont'd)

7.5 Rates and Charges (Cont'd)

7. Special Access Service (Cont'd)

7.5 Rates and Charges (Cont'd)

7. Special Access Service (Cont'd)

7.5 Rates and Charges (Cont'd)

7. Special Access Service (Cont'd)

7.5 Rates and Charges (Cont'd)

7. Special Access Service (Cont'd)

7.5 Rates and Charges (Cont'd)

7. Special Access Service (Cont'd)

7.5 Rates and Charges (Cont'd)

7. Special Access Service (Cont'd)

7.5 Rates and Charges (Cont'd)

7. Special Access Service (Cont'd)

7.5 Rates and Charges (Cont'd)

7. Special Access Service (Cont'd)

7.5 Rates and Charges (Cont'd)

7. Special Access Service (Cont'd)

7.5 Rates and Charges (Cont'd)

7. Special Access Service (Cont'd)

7.5 Rates and Charges (Cont'd)

7. Special Access Service (Cont'd)

7.5 Rates and Charges (Cont'd)

7. Special Access Service (Cont'd)

7.5 Rates and Charges (Cont'd)

7.5.7 Reserved for Future Use

7. Special Access Service (Cont'd)

7.5 Rates and Charges (Cont'd)

7.5.7 Reserved for Future Use

7. Special Access Service (Cont'd)

7.5 Rates and Charges (Cont'd)

7. Special Access Service (Cont'd)

7.5 Rates and Charges (Cont'd)

7. Special Access Service (Cont'd)

7.5 Rates and Charges (Cont'd)

7. Special Access Service (Cont'd)

7.5 Rates and Charges (Cont'd)

7. Special Access Service (Cont'd)

7.5 Rates and Charges (Cont'd)

7. Special Access Service (Cont'd)

7.5 Rates and Charges (Cont'd)

7. Special Access Service (Cont'd)

7.5 Rates and Charges (Cont'd)

7. Special Access Service (Cont'd)

7.5 Rates and Charges (Cont'd)

7. Special Access Service (Cont'd)

7.5 Rates and Charges (Cont'd)

7.5.8 Reserved for Future Use

7. Special Access Service (Cont'd)

7.5 Rates and Charges (Cont'd)

7. Special Access Service (Cont'd)

7.5 Rates and Charges (Cont'd)

7. Special Access Service (Cont'd)

7.5 Rates and Charges (Cont'd)

7. Special Access Service (Cont'd)

7.5 Rates and Charges (Cont'd)

7. Special Access Service (Cont'd)

7.5 Rates and Charges (Cont'd)

7. Special Access Service (Cont'd)

7.5 Rates and Charges (Cont'd)

7. Special Access Service (Cont'd)

7.5 Rates and Charges (Cont'd)

7. Special Access Service (Cont'd)

7.5 Rates and Charges (Cont'd)

7. Special Access Service (Cont'd)

7.5 Rates and Charges (Cont'd)

7. Special Access Service (Cont'd)

7.5 Rates and Charges (Cont'd)

7. Special Access Service (Cont'd)

7.5 Rates and Charges (Cont'd)

7. Special Access Service (Cont'd)

7.5 Rates and Charges (Cont'd)

7. Special Access Service (Cont'd)

7.5 Rates and Charges (Cont'd)

7. Special Access Service (Cont'd)

7.5 Rates and Charges (Cont'd)

7. Special Access Service (Cont'd)

7.5 Rates and Charges (Cont'd)

7. Special Access Service (Cont'd)

7.5 Rates and Charges (Cont'd)

7. Special Access Service (Cont'd)

7.5 Rates and Charges (Cont'd)

ACCESS SERVICE

7. Special Access Service

7.5 Rates and Charges (cont'd)

7.5.9 Base Rate Services, DS1 Service and DS3 Service[(2) (3)]

(A) Base Rate Service

	USOC	Monthly	Recurring Charges Optional Payment Plan 12 Mo.	36 Mo.	60 Mo.	Discount Commitment Program 36 Mo.	60 Mo.
(1) Local Distribution Channel - Per Point of Termination							
Terminating Bit Rates 2.4, 4.8, 9.6, 19.2, 56.0 and 64.0 Kbps Within Network Access Area:							
- Area A	1RADA	$105.55	$80.00	$65.00	$56.85	$75.40	$67.50
- Area B	1RADB	105.55	80.00	65.00	56.85	75.40	67.50
- Area C	1RADC	105.55	80.00	65.00	56.85	75.40	67.50
(2) DAL[(1)(4)] - 56.0 Kbps	TNT72	117.00	95.00	70.00	65.00	78.85	74.70
(3) Channel Mileage Termination, Per Point of Mileage Termination - Base Rate Transport	CM6	21.40	14.00	10.00	9.00	12.00	10.75
(4) Channel Mileage Per Mile - Base Rate	1L5XX	2.15	1.00	.80	.68	.96	.90

(N)

(1) A Base Rate Service (56 Kbps) DAL is available only when used for terminating Public Switched Digital Service.

(2) Effective on September 13, 2017, 48- and 60-month Optional Payment Plans for DS1 and DS3 Services are no longer available, and Optional Payment Plans for Base Rate Services are no longer available, including for any otherwise available renewals or conversions. Circuits already subject to an Optional Payment Plan, as of September 13, 2017, will continue to be provided under the then-current Optional Payment Plan term for the remainder of that term.

(3) Effective on September 13, 2017, 60-month DCP Payment Plans for DS1 Service are no longer available, and DCP Payment Plans for Base Rate Services are no longer available. Circuits already subject to a DCP Payment Plan, as of September 13, 2017, will continue to be provided under the then-current DCP term for the remainder of that term.

(4) Effective September 9, 2020, this Service will no longer be available for purchase by new or existing customers, and service agreements may no longer be renewed. In addition, requests to move, add or change existing service arrangements will not be accepted. Following the expiration of a customer's existing term agreement, service will be provided on a month-to-month basis at the applicable monthly extension rates until the service is discontinued. AT&T currently plans to discontinue this Service on or after June 30, 2024. (N)

ACCESS SERVICE

7. Special Access Service (Cont'd)

7.5 Rates and Charges (Cont'd)

7.5.9 Base Rate Services, DS1 Service and DS3 Service (Cont'd)

A. Base Rate Service (Cont'd)

5. Optional Features and Functions (Cont'd)

			Recurring Charges Optional Payment Plan		
	USOC	Monthly	12 Mo.	36 Mo.	60 Mo.
a. Central Office Bridging, Per Port	B5NGF	$25.00	$20.00	$17.00	$15.00

			Recurring Charges Optional Payment Plan		
	Nonrecurring Charges	USOC	Monthly	12 Mo.	36 Mo.	60 Mo.
b. NRS System Location[/2/] Port Termination						
- Base Rate Termination	-	PT5	$20.00	$19.00	$17.00	$16.00

	USOC	Monthly Rate	Nonrecurring Charges
c. Secondary Channel			
Per Local Distribution Channel (2.4, 4.8, 9.6 and 56.0[/1/] Kbps)	SCA	None	None

/1/ Since all 56.0 Kbps lines are not capable of furnishing Secondary Channel Services, a service inquiry must be made to determine availability.

/2/ Effective December 5, 2018, Network Reconfiguration Service (NRS) will no longer be available for purchase by new or existing customers, and NRS service agreements may no longer be renewed. Effective July 31, 2022, the Telephone Company will no longer accept new requests for physical changes to existing service arrangements including the upgrade or downgrade of access/port speed, installation of new service, or moves to different service addresses.

ACCESS SERVICE

7. Special Access Service (Cont'd)

7.5 Rates and Charges (Cont'd)

7.5.9 Base Rate Services, DS1 Service and DS3 Service (Cont'd)

(A) Base Rate Service (Cont'd)

	USOC	Nonrecurring Charges Customer Requested Response in Work Days 3 Day	1 Day
(5) Optional Features and Functions (Cont'd)			
(d) Cross-Connection of Services			
DSO to DSO Cross-connect Base Rate to Base Rate	CX903	$150.00	
	CX901		$200.00

	Nonrecurring Charge
(e) Shared Network Arrangement	
- Processing Charge per Service Order	$30.00

7. Special Access Service (Cont'd)

7.5 Rates and Charges (Cont'd)

7.5.9 Base Rate Services, DS1 Service and DS3 Service (Cont'd)

(A) Base Rate Service (Cont'd)

ACCESS SERVICE

7. Special Access Service (Cont'd)

7.5 Rates and Charges (Cont'd)

7.5.9 Base Rate Services, DS1 Service and DS3 Service (Cont'd)

(A) Base Rate Service (Cont'd)

(5) Optional Features and Functions (Cont'd)

Interconnection Central Office Multiplexing - Per Arrangement

		Recurring Charges				
			Optional Payment Plan			
	USOC	Monthly	12 Mo.	36 Mo.	60 Mo.	
Optical Interconnection Service DS1 to Base Rate Service, Direct Analog[1] Service, or Series Channel Service						(N)
Common Equipment	MX6	$165.00	$157.00	$145.00	$135.00	
Per Connection	PUG3X	9.50	9.50	9.50		

[1] Effective September 9, 2020, this Service will no longer be available for purchase by new or existing customers, and service agreements may no longer be renewed. In addition, requests to move, add or change existing service arrangements will not be accepted. Following the expiration of a customer's existing term agreement, service will be provided on a month-to-month basis at the applicable monthly extension rates until the service is discontinued. AT&T currently plans to discontinue this Service on or after June 30, 2024. (N)

7. Special Access Service

7.5 Rates and Charges (Cont'd)

7.5.9 Base Rate Services, DS1 Service and DS3 Service (Cont'd)

B. DS1 Service

1. Local Distribution Channel
- Per Point of Termination

Terminating Bit Rate 1.544 Mbps Within Network Access Area:

			Recurring Charges Optional Payment Plan/2/				
	USOC	Monthly	12 Mo.	24 Mo.	36 Mo.	48 Mo.	60 Mo.
Zone 1	FQA1A	$294.68 (I)	$219.56 (I)	$140.40	$110.16	$102.00	$ 90.00
Zone 2	FQA1B	306.23 (I)	236.90 (I)	151.20	118.80	110.00	97.00
Zone 3	FQA1C	323.57 (I)	248.45 (I)	167.40	129.60	120.00	105.00
Zone 4	FQA1D	352.46 (I)	265.79 (I)	178.20	132.30	122.50	107.50
Zone 5	FQA1E	375.57 (I)	288.90 (I)	189.00	135.00	125.00	109.75

	Discount Commitment Program/1//2/	
	36 Mo.	60 Mo.
Zone 1	$117.00	$104.00
Zone 2	127.00	112.00
Zone 3	138.00	121.00
Zone 4	141.00	121.00
Zone 5	144.00	123.00

Terminating Bit Rate 128.0, 256.0 and 384.0 Kbps Within Network Access Area:

			Recurring Charges Optional Payment Plan/2/					Discount Commitment Program/1//2/	
	USOC	Monthly	12 Mo.	24 Mo.	36 Mo.	48 Mo.	60 Mo.	36 Mo.	60 Mo.
Zone 1	FQA1A	$250.00	$190.00	$130.00	$102.00	$102.00	$ 90.00	$117.00	$104.00
Zone 2	FQA1B	260.00	205.00	140.00	110.00	110.00	97.00	127.00	112.00
Zone 3	FQA1C	275.00	215.00	155.00	120.00	120.00	105.00	138.00	121.00
Zone 4	FQA1D	300.00	230.00	165.00	122.50	122.50	107.50	141.00	124.00
Zone 5	FQA1E	320.00	250.00	175.00	125.00	125.00	109.75	144.00	126.00

/1/ DCP is not available for DS1 Local Distribution Channels (LDC) associated with 128, 256 and 384 Kbps Channel Mileage Termination and Channel Mileage, installed after January 26, 2001.

/2/ For all Optional Payment Plans and Discount Commitment Programs subscribed to prior to March 17, 2001, see Section 7.5.16 following.

ACCESS SERVICE

7. Special Access Service (Cont'd)

7.5 Rates and Charges (Cont'd)

7.5.9 Base Rate Services, DS1 Service and DS3 Service (Cont'd)

B. DS1 Service

2. DAL[(1)(4)(5)] (1.544 Mbps) (C)

(D)

(D)

(1) An DS1 DAL is available only when the WATS service office is an appropriately equipped digital switch.
(2) For all Optional Payment Plans and Discount Commitment Programs subscribed to prior to March 17, 2001,see Section 7.5.16 following.
(3) DCP is not available for DS1 Local Distribution Channels (LDC) associated with 128, 256 and 384 Kbps Channel Mileage Termination and Channel Mileage, installed after January 26, 2001.
(4) Effective September 9, 2020, this Service will no longer be available for purchase by new or existing customers, and service agreements may no longer be renewed. In addition, requests to move, add or change existing service arrangements will not be accepted. Following the expiration of a customer's existing term agreement, service will be provided on a month-to-month basis at the applicable monthly extension rates until the service is discontinued. AT&T currently plans to discontinue this Service on or after June 30, 2024.
(5) Pursuant to Section 2.1.4, DS1 Dedicated Access Line ("DS1 DAL") has been discontinued and is no longer offered from this publication as April 1, 2022. The Company will make customer-specific accommodations to the extent required by 220 ILCS 5/13-406.1. (N) (N)

ACCESS SERVICE

7. Special Access Service (Cont'd)

7.5 Rates and Charges (Cont'd)

7.5.9 Base Rate Services, DS1 Service and DS3 Service (Cont'd)

(B) DS1 Service (Cont'd)

(3) Channel Mileage Termination

Per Point of Termination
- 1.544 Mbps

			Recurring Charges Optional Payment Plan/1/				
	USOC	Monthly	12 Mo.	24 Mo.	36 Mo.	48 Mo.	60 Mo.
Zone 1	CZ4XA	$ 102.50	$68.00	$45.00	$35.00	$35.00	$21.00
Zone 2	CZ4XB	104.50	70.00	47.00	37.00	37.00	21.50
Zone 3	CZ4XC	104.50	72.00	49.00	39.00	39.00	23.00
Zone 4	CZ4XD	110.00	74.00	51.00	41.00	41.00	25.00
Zone 5	CZ4XE	113.00	76.00	53.00	43.00	43.00	27.00

	Discount Commitment Program/1/	
	36 Mo.	60 Mo.
Zone 1	$40.25	$24.15
Zone 2	42.55	24.73
Zone 3	44.85	26.45
Zone 4	47.15	28.75
Zone 5	49.45	31.05

/1/ For 60 month Optional Payment Plans and 60 month Discount Commitment Programs subscribed to prior to March 17, 2001, see Section 7.5.16 following.

7. Special Access Service (Cont'd)

7.5 Rates and Charges (Cont'd)

7.5.9 Base Rate Services, DS1 Service and DS3 Service (Cont'd)

(B) DS1 Service (Cont'd)

(3) Channel Mileage Termination (Cont'd)

Per Point of Termination
- 128.0, 256.0 and 384.0 Kbps

	USOC	Monthly
Zone 1	CZ4XA	$35.00
Zone 2	CZ4XB	35.00
Zone 3	CZ4XC	35.00
Zone 4	CZ4XD	35.00
Zone 5	CZ4XE	35.00

ACCESS SERVICE

7. Special Access Service (Cont'd)

7.5 Rates and Charges (Cont'd)

7.5.9 Base Rate Services, DS1 Service and DS3 Service (Cont'd)

(B) DS1 Service (Cont'd)

(4) Channel Mileage

Per Mile
- 1.544 Mbps

			Recurring Charges Optional Payment Plan				
	USOC	Monthly	12 Mo.	24 Mo.	36 Mo.	48 Mo.	60 Mo.
Zone 1	1YZXA	$27.90	$24.00	$17.00	$13.25	$13.25	$11.00
Zone 2	1YZXB	29.00	24.50	18.00	13.45	13.45	11.10
Zone 3	1YZXC	32.10	25.00	19.00	13.65	13.65	11.20
Zone 4	1YZXD	35.10	26.00	20.00	13.85	13.85	11.30
Zone 5	1YZXE	37.90	29.00	21.00	14.05	14.05	11.40

	Discount Commitment Program	
	36 Mo.	60 Mo.
Zone 1	$15.24	$12.65
Zone 2	15.47	12.77
Zone 3	15.81	12.88
Zone 4	15.93	13.00
Zone 5	16.16	13.11

7. Special Access Service (Cont'd)

7.5 Rates and Charges (Cont'd)

7.5.9 Base Rate Services, DS1 Service and DS3 Service (Cont'd)

(B) DS1 Service (Cont'd)

(4) Channel Mileage (Cont'd)

Per Mile
- 128.0, 256.0 and 384.0 Kbps

	USOC	Monthly
Zone 1	1YZXA	$9.50
Zone 2	1YZXB	9.50
Zone 3	1YZXC	9.50
Zone 4	1YZXD	9.50
Zone 5	1YZXE	9.50

ACCESS SERVICE

7. Special Access Service (Cont'd)

7.5 Rates and Charges (Cont'd)

7.5.9 Base Rate Services, DS1 Service and DS3 Service (Cont'd)

(B) DS1 Service (Cont'd)

(5) Optional Features and Functions

(a) Clear Channel Capability
- Per 1.544 Mbps Circuit Arranged /1/

	USOC	Monthly Rate	Nonrecurring Charge
Zone 1	CLYXA	None	None
Zone 2	CLYXB	None	None
Zone 3	CLYXC	None	None
Zone 4	CLYXD	None	None
Zone 5	CLYXE	None	None

/1/ This charge applies whether the DS1 circuit is end-to-end or multiplexed on to a higher speed service.

7. Special Access Service (Cont'd)

7.5 Rates and Charges (Cont'd)

7.2.9 Base Rate Services, DS1 Service and DS3 Service (Cont'd)

(B) DS1 Service (Cont'd)

(5) Optional Features and Functions (Cont'd)

(b) Reserved for Future Use

7. Special Access Service (Cont'd)

7.5 Rates and Charges (Cont'd)

7.5.9 Base Rate Services, DS1 Service and DS3 Service (Cont'd)

(B) DS1 Service (Cont'd)

(5) Optional Features and Functions (Cont'd)

(c) Reserve for Future Use

ACCESS SERVICE

7. Special Access Service (Cont'd)

7.5 Rates and Charges (Cont'd)

ACCESS SERVICE

7. Special Access Service

7.5 Rates and Charges (Cont'd)

7.5.9 Base Rate Services, DS1 Service and DS3 Service (Cont'd)

(B) DS1 Service (Cont'd)

(5) Optional Features and Functions (Cont'd)

(d) Interconnection Central Office Multiplexing (Cont'd)

DS1 to Voice/Base Rate/128.0, 256.0, 384.0 Kbps Transport[2]

			Recurring Charges Optional Payment Plan[1]				
	USOC	Monthly	12 Mo.	24 Mo.	36 Mo.	48 Mo.	60 Mo.
Zone 1	QMVXA	$432.00	$265.00	$252.00	$191.00	$191.00	$168.00
Zone 2	QMVXB	436.00	267.00	255.00	193.00	193.00	170.00
Zone 3	QMVXC	463.00	281.00	268.00	200.00	200.00	176.00
Zone 4	QMVXD	510.00	299.00	285.00	210.00	210.00	186.00
Zone 5	QMVXE	520.00	306.00	292.00	215.00	215.00	190.00

	Discount Commitment Program[1]	
	36 Mo.	60 Mo.
Zone 1	$220.00	$193.00
Zone 2	222.00	196.00
Zone 3	230.00	202.00
Zone 4	242.00	214.00
Zone 5	247.00	219.00

(1) For all Optional Payment Plans and Discount Commitment Programs subscribed to prior to March 17, 2001, See Section 7.5.16 following.

(2) A channel of this DS1 to the hub may be used for Dedicated Access Line[3] Service. (D)(T)
(D)

(D)
|
(D)

(3) Effective September 9, 2020, this Service will no longer be available for purchase by new or existing customers, and service agreements may no longer be renewed. In addition, requests to move, add or change existing service arrangements will not be accepted. Following the expiration of a customer's existing term agreement, service will be provided on a month-to-month basis at the applicable monthly extension rates until the service is discontinued. AT&T currently plans to discontinue this Service on or after June 30, 2024. (T)

7. Special Access Service (Cont'd)

7.5 Rates and Charges (Cont'd)

7. Special Access Service (Cont'd)

7.5 Rates and Charges (Cont'd)

7. Special Access Service (Cont'd)

7.5 Rates and Charges (Cont'd)

7. Special Access Service (Cont'd)

7.5 Rates and Charges (Cont'd)

7. Special Access Service (Cont'd)

7.5 Rates and Charges (Cont'd)

7. Special Access Service (Cont'd)

7.5 Rates and Charges (Cont'd)

7.5.9 Base Rate Services, DS1 Service and DS3 Service (Cont'd)

(B) DS1 Service (Cont'd)

(5) Optional Features and Functions (Cont'd)

ACCESS SERVICE

7. Special Access Service (Cont'd)

7.5 Rates and Charges (Cont'd)

7.5.9 Base Rate Services, DS1 Service and DS3 Service (Cont'd)

(B) DS1 Service (Cont'd)

(5) Optional Features and Functions (Cont'd)

(f) Cross-Connection of Services

	Nonrecurring USOC	Charge
DS1 to DS1 Cross-Connect		
- 1 Day Response		
Zone 1	CCUAA	$325.00
Zone 2	CCUAB	$325.00
Zone 3	CCUAC	$325.00
Zone 4	CCUAD	$325.00
Zone 5	CCUAE	$325.00

ACCESS SERVICE

7. Special Access Service (Cont'd)

7.5 Rates and Charges (Cont'd)

7.5.9 Base Rate Services, DS1 Service and DS3 Service (Cont'd)

(B) DS1 Service (Cont'd)

(5) Optional Features and Functions (Cont'd)

(f) Cross-Connection of Services (Cont'd)

DS1 to DS1 Cross-Connect (Cont'd)
- 3 Day Response

	Nonrecurring USOC	Charge
Zone 1	CCUBA	$190.00
Zone 2	CCUBB	$190.00
Zone 3	CCUBC	$190.00
Zone 4	CCUBD	$190.00
Zone 5	CCUBE	$190.00

ACCESS SERVICE

7. Special Access Service (Cont'd)

7.5 Rates and Charges (Cont'd)

7.5.9 Base Rate Services, DS1 Service and DS3 Service (Cont'd)

(B) DS1 Service (Cont'd)

(5) Optional Features and Functions (Cont'd)

(g) Shared Network Arrangement - Processing Charge per Service Order

	Nonrecurring USOC	Charge
Zone 1	SRNXA	$37.50
Zone 2	SRNXB	$37.50
Zone 3	SRNXC	$37.50
Zone 4	SRNXD	$37.50
Zone 5	SRNXE	$37.50

ACCESS SERVICE

7. Special Access Service (Cont'd)

7.5 Rates and Charges (Cont'd)

7.5.9 Base Rate Services, DS1 Service and DS3 Service (Cont'd)

(B) DS1 Service (Cont'd)

(5) Optional Features and Functions (Cont'd)

(h) NRS System Location Port Termination - DS1 Termination/2/

			Recurring Charges Optional Payment Plan/1/				
	USOC	Monthly	12 Mo.	24 Mo.	36 Mo.	48 Mo.	60 Mo.
Zone 1	PQD1A	$50.00	$46.00	$44.00	$41.00	$40.00	$38.00
Zone 2	PQD1B	50.00	46.00	44.00	41.00	40.00	38.00
Zone 3	PQD1C	50.00	46.00	44.00	41.00	40.00	38.00
Zone 4	PQD1D	50.00	46.00	44.00	41.00	40.00	38.00
Zone 5	PQD1E	50.00	46.00	44.00	41.00	40.00	38.00

/1/ For all Optional Payment Plans subscribed to prior to March 17, 2001, see Section 7.5.16 following.
/2/ Effective December 5, 2018, Network Reconfiguration Service (NRS) will no longer be available for purchase by new or existing customers, and NRS service agreements may no longer be renewed. Effective July 31, 2022, the Telephone Company will no longer accept new requests for physical changes to existing service arrangements including the upgrade or downgrade of access/port speed, installation of new service, or moves to different service addresses.

ACCESS SERVICE

7. Special Access Service (Cont'd)

7.5 Rates and Charges (Cont'd)

7.5.9 Base Rate Services, DS1 Service and DS3 Service (Cont'd)

(B) DS1 Service (Cont'd)

(5) Optional Features and Functions (Cont'd)

Multiplexer Cross-Connection - Per Central Office

USOC	Monthly Rate
CMO1X	$15.00

ACCESS SERVICE

7. Special Access Service (Cont'd)

7.5 Rates and Charges (Cont'd)

7.5.9 Base Rate Services, DS1 Service and DS3 Service (Cont'd)

(B) DS1 Service (Cont'd)

(5) Optional Features and Functions (Cont'd)

(j) Shared Facility Channel Service

	USOC	Monthly	USOC	Nonrecurring Charge
- Local Distribution Channel				
Zone 1	TWBZA	$60.00	NRBZA	$40.00
Zone 2	TWBZB	60.00	NRBZB	40.00
Zone 3	TWBZC	60.00	NRBZC	40.00
Zone 4	TWBZD	60.00	NRMZD	40.00
Zone 5	TWBZE	60.00	NRMZE	40.00

ACCESS SERVICE

7. Special Access Service (Cont'd)

7.5 Rates and Charges (Cont'd)

7.5.9 Base Rate Services, DS1 Service and DS3 Service (Cont'd)

(B) DS1 Service (Cont'd)

(5) Optional Features and Functions (Cont'd)

(j) Shared Facility Channel Service (Cont'd)

	USOC	Monthly
- Channel Mileage Termination Per Point of Termination		
Zone 1	CZ4ZA	$12.50
Zone 2	CZ4ZB	12.50
Zone 3	CZ4ZC	12.50
Zone 4	CZ4ZD	12.50
Zone 5	CZ4ZE	12.50

ACCESS SERVICE

7. Special Access Service (Cont'd)

7.5 Rates and Charges (Cont'd)

7.5.9 Base Rate Services, DS1 Service and DS3 Service (Cont'd)

(B) DS1 Service (Cont'd)

(5) Optional Features and Functions (Cont'd)

(j) Shared Facility Channel Service (Cont'd)

	USOC	Monthly
Channel Mileage - Per Mile		
Zone 1	1YZZA	$3.50
Zone 2	1YZZB	3.50
Zone 3	1YZZC	3.50
Zone 4	1YZZD	3.50
Zone 5	1YZZE	3.50

7. Special Access Service (Cont'd)

7.5 Rates and Charges (Cont'd)

7.5.9 Base Rate Services, DS1 Service and DS3 Service (Cont'd)

(C) DS3 Service

(1) Local Distribution Channel - Per Point of Termination - Terminating Bit Rate, 44.736 Mbps

(a) DS3 LDC With Electrical Interface

		Recurring Charges *Optional Payment Plan*					
Description	USOC	12 Month	24 Month	36 Month	48 Month	60 Months	Monthly Extension
Zone 1	TZUPA	$2,420.00(I)	$1,800.00	$1,045.00	$1,045.00	$850.00	$3,410.00(I)
Zone 2	TZUPB	2,447.50(I)	1,825.00	1,055.00	1,055.00	860.00	3,630.00(I)
Zone 3	TZUPC	2,557.50(I)	1,925.00	1,115.00	1,115.00	910.00	3,850.00(I)
Zone 4	TZUPD	2,750.00(I)	2,100.00	1,145.00	1,145.00	930.00	4,070.00(I)
Zone 5	TZUPE	2,777.50(I)	2,125.00	1,155.00	1,100.00	900.00	4,290.00(I)

ACCESS SERVICE

7. Special Access Service (Cont'd)

7.5 Rates and Charges (Cont'd)

7.5.9 Base Rate Services, DS1 Service and DS3 Service (Cont'd)

(B) DS3 Service (Cont'd)

(1) Local Distribution Channel - Per Point of Termination - Terminating Bit Rate, 44.736 Mbps (Cont'd)

(b) DS3 Service Package with Optical interface - Per Package

	USOC	Monthly Extension Rate	Recurring Charges Optional Payment Plan/1/ 12 Mo.	24 Mo.	36 Mo.	48 Mo.	60 Mo.
Zone 1							
DS3012	PCG3A	22,525.00	18,900.00	18,900.00	7,350.00	7,350.00	4,500.00
DS3024	PCG3A	38,975.00	28,350.00	28,350.00	10,500.00	10,500.00	6,000.00
Zone 2							
DS3012	PCG3B	22,525.00	18,900.00	18,900.00	7,350.00	7,350.00	4,500.00
DS3024	PCG3B	38,975.00	28,350.00	28,350.00	10,500.00	10,500.00	6,000.00
Zone 3							
DS3012	PCG3C	22,525.00	18,900.00	18,900.00	7,350.00	7,350.00	4,500.00
DS3024	PCG3C	38,975.00	28,350.00	28,350.00	10,500.00	10,500.00	6,000.00
Zone 4							
DS3012	PCG3D	22,525.00	18,900.00	18,900.00	7,350.00	7,350.00	4,500.00
DS3024	PCG3D	38,975.00	28,350.00	28,350.00	10,500.00	10,500.00	6,000.00
Zone 5							
DS3012	PCG3E	22,525.00	18,900.00	18,900.00	7,350.00	7,350.00	4,500.00
DS3024	PCG3E	38,975.00	28,350.00	28,350.00	10,500.00	10,500.00	6,000.00

/1/ For all Optional Payment Plans subscribed prior to March 17, 2001, see Section 7.5.16 following.

7. Special Access Service (Cont'd)

7.5 Rates and Charges (Cont'd)

7. Special Access Service (Cont'd)

7.5 Rates and Charges (Cont'd)

7.5.9 Base Rate Services, DS1 Service and DS3 Service (Cont'd)

(C) DS3 Service (Cont'd)

(1) Local Distribution Channel - Per Point of Termination - Terminating Bit Rate, 44.736 Mbps (Cont'd)

(c) DS3 Service Channel - Per Termination

		Recurring Charges			
		Optional Payment Plan			
	USOC	12 Month	36 Month	60 Month	Monthly Extension
Terminating Bit Rate 44.736 Mbps					
- Optical					
Zone 1	HZ4XA				$500.00
Zone 2	HZ4XB				500.00
Zone 3	HZ4XC				500.00
Zone 4	HZ4XD				500.00
Zone 5	HZ4XE				500.00

7. Special Access Service (Cont'd)

7.5 Rates and Charges (Cont'd)

7.5.9 Base Rate Services, DS1 Service and DS3 Service (Cont'd)

(C) DS3 Service (Cont'd)

(2) Channel Mileage Termination - Per Point of Termination

	USOC	Monthly Extension Rate	Recurring Charges Optional Payment Plan 12 Mo.	24 Mo.	36 Mo.	48 Mo.	60 Mo.
Zone 1	CZ4XA	$625.00	$300.00	$275.00	$250.00	$250.00	$200.00
Zone 2	CZ4XB	635.00	315.00	290.00	260.00	260.00	210.00
Zone 3	CZ4XC	655.00	330.00	305.00	270.00	270.00	220.00
Zone 4	CZ4XD	725.00	345.00	320.00	280.00	280.00	230.00
Zone 5	CZ4XE	735.00	360.00	335.00	290.00	290.00	240.00

ACCESS SERVICE

7. Special Access Service

7.5 Rates and Charges (Cont'd)

7.5.9 Base Rate Services, DS1 Service and DS3 Service (Cont'd)

(C) DS3 Service (Cont'd)

(3) Channel Mileage - Per Mile

	USOC	Monthly Extension Rate	Recurring Charges Optional Payment Plan 12 Mo.	24 Mo.	36 Mo.	48 Mo.	60 Mo.
Zone 1	1YZXA	$189.00	$100.00	$ 90.00	$55.00	$55.00	$27.70
Zone 2	1YZXB	199.00	105.00	95.00	57.50	57.50	29.70
Zone 3	1YZXC	216.00	110.00	100.00	60.00	60.00	31.70
Zone 4	1YZXD	229.00	115.00	105.00	62.50	62.50	35.70
Zone 5	1YZXE	234.00	120.00	110.00	65.00	65.00	37.70

ACCESS SERVICE

7. Special Access Service (Cont'd)

7.5 Rates and Charges (Cont'd)

7.5.9 Base Rate Services, DS1 Service and DS3 Service (Cont'd)

(C) DS3 Service (Cont'd)

(4) Optional Features and Functions

(a) Interconnection - Central Office Multiplexing - Per Arrangement - DS3 to DS1

	USOC	Monthly Extension Rate	Recurring Charges Optional Payment Plan/1/ 12 Mo.	24 Mo.	36 Mo.	48 Mo.	60 Mo.
Zone 1	QM3XA	$765.00	$565.00	$570.00	$466.00	$466.00	$420.00
Zone 2	QM3XB	780.00	600.00	590.00	475.00	475.00	430.00
Zone 3	QM3XC	795.00	610.00	595.00	490.00	490.00	445.00
Zone 4	QM3XD	825.00	635.00	620.00	515.00	515.00	460.00
Zone 5	QM3XE	830.00	640.00	635.00	525.00	525.00	470.00

/1/ For 12 and 24 month Optional Payment Plans subscribed to prior to July 13, 2005, see Section 7.5.16, following.

ACCESS SERVICE

7. Special Access Service (Cont'd)

7.5 Rates and Charges (Cont'd)

7.5.9 Base Rate Services, DS1 Service and DS3 Service (Cont'd)

(C) DS3 Service (Cont'd)

(4) Optional Features and Functions (Cont'd)

(b) Cross-Connection of Services - DS3 to DS3

	USOC	Nonrecurring Charge
1 Day Response		
Zone 1	CCUCA	$350.00
Zone 2	CCUCB	$350.00
Zone 3	CCUCC	$350.00
Zone 4	CCUCD	$350.00
Zone 5	CCUCE	$350.00

ACCESS SERVICE

7. Special Access Service (Cont'd)

7.5 Rates and Charges (Cont'd)

7.5.9 Base Rate Services, DS1 Service and DS3 Service (Cont'd)

(C) DS3 Service (Cont'd)

(4) Optional Features and Functions (Cont'd)

(b) Cross-Connection of Services - DS3 to DS3 (Cont'd)

		USOC	Nonrecurring Charge
3 Day Response			
	Zone 1	CCUDA	$205.00
	Zone 2	CCUDB	$205.00
	Zone 3	CCUDC	$205.00
	Zone 4	CCUDD	$205.00
	Zone 5	CCUDE	$205.00

ACCESS SERVICE

7. Special Access Service (Cont'd)

7.5 Rates and Charges (Cont'd)

7.5.9 Base Rate Services, DS1 Service and DS3 Service (Cont'd)

(C) DS3 Service (Cont'd)

(4) Optional Features and Functions (Cont'd)

(c) NRS System Location Port Termination - Per DS3 Termination/2/

	USOC	Monthly Extension Rate	Recurring Charges Optional Payment Plan/1/ 12 Mo.	24 Mo.	36 Mo.	48 Mo.	60 Mo.
Zone 1	R6SXA	$250.00	$200.00	$175.00	$160.00	$155.00	$145.00
Zone 2	R6SXB	250.00	200.00	175.00	160.00	155.00	145.00
Zone 3	R6SXC	250.00	200.00	175.00	160.00	155.00	145.00
Zone 4	R6SXD	250.00	200.00	175.00	160.00	155.00	145.00
Zone 5	R6SXE	250.00	200.00	175.00	160.00	155.00	145.00

/1/ For all Optional Payment Plans subscribed to prior to March 17, 2001, see Section 7.5.16 following.
/2/ Effective December 5, 2018, Network Reconfiguration Service (NRS) will no longer be available for purchase by new or existing customers, and NRS service agreements may no longer be renewed. Effective July 31, 2022, the Telephone Company will no longer accept new requests for physical changes to existing service arrangements including the upgrade or downgrade of access/port speed, installation of new service, or moves to different service addresses.

7. Special Access Service (Cont'd)

7.5 Rates and Charges (Cont'd)

7.5.9 Base Rate Services, DS1 Service and DS3 Service (Cont'd)

(C) DS3 Service (Cont'd)

(4) Optional Features and Functions (Cont'd)

(d) Multiplexer Cross-Connection - Per Central Office

	USOC	Monthly
Zone 1	CMO3A	$11.25
Zone 2	CMO3B	12.60
Zone 3	CMO3C	16.50
Zone 4	CMO3D	18.75
Zone 5	CMO3E	22.50

ACCESS SERVICE

7. Special Access Service (Cont'd)

7.5 Rates and Charges (Cont'd)

7.5.9 Base Rate Services, DS1 Service and DS3 Service (Cont'd)

(D) Network Reconfiguration Service (NRS)/2/

	USOC	Recurring Charges Monthly	12 Mo.	*Optional Payment Plan*/1/ 24 Mo.	36 Mo.	48 Mo.	60 Mo.	Nonrecurring Charge
(1) NRS Service Charge - Per Customer Database	FN6DD	$240.00	$228.00	$221.00	$204.00	$198.00	$192.00	$3,000.00
(2) Database Modification - Per Modification	FN6DC	<----------None---------->						150.00
(3) NRS Access Arrangement - Per Arrangement	RNQPA	210.00	199.50	193.20	178.50	173.25	168.00	75.00
(4) Attendant Access - Per first 30 minutes per occurrence	NRBN1	<----------None---------->						55.00
- Per additional 15 minute increments	NRBNA	<----------None---------->						10.00
(5) NRS Training - Per hour of additional training	NRBNT	<----------None---------->						50.00

/1/ For all Optional Payment Plans subscribed to prior to March 17, 2001, see Section 7.5.16 following.
/2/ Effective December 5, 2018, Network Reconfiguration Service (NRS) will no longer be available for purchase by new or existing customers, and NRS service agreements may no longer be renewed. Effective July 31, 2022, the Telephone Company will no longer accept new requests for physical changes to existing service arrangements including the upgrade or downgrade of access/port speed, installation of new service, or moves to different service addresses.

ACCESS SERVICE

7. Special Access Service (Cont'd)

7.5 Rates and Charges (Cont'd)

7.5.10 Optical Carrier Network (OCN) Point-to-Point Service

(A) OC-3/OC-3c Service*

		USOC	Monthly	Recurring Charges Optional Payment Plan 12 Mo.(1)	36 Mo (1)	60 Mo (1)
(1)	Local Distribution Channel - Per Point of Termination Terminating Bit Rate 155.52 Mbps	TMECS	$20,728.58(I)	$9,821.30(I)	$8,360.63(I)	$1,125.00
(2)	Channel Mileage Termination - Per Point of Termination - Per Point of Mileage Termination 155.52 bps	CM6	8,460.05(I)	2,865.27(I)	2,438.51(I)	375.00
(3)	Channel Mileage - Per Mile 155.52 Mbps	1L5XX	4,909.38(I)	1,833.48(I)	1,527.89(I)	200.00
(4)	Optional Features and Functions					
(a)	OC-3 Add/Drop Multiplexing** - Per Arrangement	MPECX	12,843.72(I)	6,765.53(I)	5,738.78(I)	775.00

(1) For term pricing plans effective on or after November 25, 2019, see terms in Section 7.2.10(F)(1) of this guidebook.

* Effective April 11, 2002, the 48-month Optional Payment Plans were grandfathered for existing customers until their term plan expires, at which time any renewed services or new contracts established on or after April 11, 2002, is no longer be available. Applicable rates for 48-month Optional Payment Plans can be found in Section 7.5.16, following.

** Concatenated services not available.

ACCESS SERVICE

7. Special Access Service (Cont'd)

7.5 Rates and Charges (Cont'd)

7.5.10 Optical Carrier Network (OCN) Point-to-Point Service (Cont'd)

(A) OC-3/OC-3c Service (Cont'd)

(4) Optional Features and Functions (Cont'd)

	USOC	Monthly	Nonrecurring Charge	
(b) Add/Drop Function				
- Per DS3 Add or Drop	MXJBX	$1,190.16	None	(I)
- Per DS1 Add or Drop	MXJAX	495.92	None	(I)
- Per 1000 Base LX	MX4LX	500.00	None	
(d) 1+1 Protection				
- Per OC-3/OC-3c Local Distribution Channel	P8T	57.00	None	
(e) 1+1 Protection with Cable Survivability(1)				
- Per OC-3/OC-3c Local Distribution Channel	P3S	57.00	$500.00	
(f) 1+1 Protection with Route Survivability(1)				
(1) Per OC-3/OC-3c Local Distribution Channel	P8T	Apply Rates and Charges as P8T above plus (2) below		
(2) Per Quarter Route Mile	S2DXY	50.00	None	

(1) Not available for OCN service originating and terminating within a Telephone Company location.

ACCESS SERVICE

7. Special Access Service (Cont'd)

7.5 Rates and Charges (Cont'd)

7.5.10 Optical Carrier Network (OCN) Point-to-Point Service (Cont'd)

(A) OC-3/OC-3c Service (Cont'd)

(4) Optional Features and Functions (Cont'd)

	USOC	Monthly	Nonrecurring Charge
(g) 1+1 Protection with Central Office Survivability*			
(1) Per OC-3 Local Distribution Channel	P8T	Apply Rates and Charges as P8T above plus (2) and (3) below	
(2) Per Quarter Route Mile	S2VXY	$ 50.00	None
(3) Channel Mileage	1L5XX	Apply Rates and Charges as 7.5.10A preceding	
and Channel Mileage Terminations	CM6		
(h) Shared Network Arrangement			
- Processing Charge Per Service Order	NRBOP		$30.00
(i) Diversity(1)			
- Per Quarter Route Mile	S2DXY	50.00	0.00
- Per OC-3/OC-3c	CPAPA	200.00	0.00

* 1+1 Protection with Central Office Survivability for OC-3 subscribed to on or after April 11, 2002, will no longer be available

(1) The Per Quarter Route Mile is required for one or both ends of the second service when both services terminate at the same customer premises.

ACCESS SERVICE

7. Special Access Service

7.5 Rates and Charges (Cont'd)

7.5.10 Optical Carrier Network (OCN) Point-to-Point Service (Cont'd)

(B) OC-12/OC-12c Service*

	USOC	Monthly	Recurring Charges Optional Payment Plan 12 Mo.(1)	36 Mo.(1)	(D)
(1) Local Distribution Channel - Per Point of Termination Terminating Bit Rate 622.08 Mbps	TMECS	$81,823.23	$34,835.96	$31,169.03	(I)(D)
(2) Channel Mileage Termination - Per Point of Termination	CM6	33,547.50	6,096.29	5,454.56	(I)(D)
- Per Point of Mileage Termination 622.08 Mbps	1L5XX	9,580.79	4,354.50	3,896.15	(I)(D)
(3) Channel Mileage - Per Mile 622.08 Mbps					
(4) Optional Features and Functions					
(a) OC-12 Add/Drop Multiplexing** - Per Arrangement	MPEDX	47,873.97	25,210.25	21,451.64	(I)(D)

(1) For term pricing plans effective on or after November 25, 2019, see terms in Section 7.2.10(F)(1) of this guidebook.

* Effective April 11, 2002, the 48-month Optional Payment Plans were grandfathered for existing customers until their term plan expires, at which time any renewed services or new contracts established on or after April 11, 2002, is no longer be available. Applicable rates for 48-month Optional Payment Plans can be found in section 7.5.16, following.

** Concatenated services not available.

7. Special Access Service (Cont'd)

7.5 Rates and Charges (Cont'd)

7.5.10 Optical Carrier Network (OCN) Point-to-Point Service (Cont'd)

(B) OC-12/OC-12c Service (Cont'd)

(4) Optional Features and Functions (Cont'd)

	USOC	Monthly	Nonrecurring Charge	
(b) Add/Drop Function				
- Per OC-3 Add or Drop	MXJCX	$2,231.57	None	(I)
- Per DS3 Add or Drop	MXJBX	1,785.24	None	(I)
- Per 1000 Base LX	MX4LX	500.00	None	
(c) Not in Use				
(d) 1+1 Protection				
- Per OC-12/OC-12c Customer Premises	P8T	250.00	None	
(e) 1+1 Protection with Cable Survivability(1)				
- Per OC-12/OC-12c Customer Premises	P3S	250.00	$500.00	
(f) 1+1 Protection with Route Survivability(1)				
(1) Per OC-12/OC-12c Customer Premises	P8T	Apply Rates and Charges as P8T above plus (2) below		
(2) Per Quarter Route Mile	S2DXY	75.00	None	

(1) Not available for OCN service originating and terminating within a Telephone Company location.

ACCESS SERVICE

7. Special Access Service (Cont'd)

7.5 Rates and Charges (Cont'd)

7.5.10 Optical Carrier Network (OCN) Point-to-Point Service (Cont'd)

(B) OC-12/OC-12c Service (Cont'd)

(4) Optional Features and Functions (Cont'd)	**USOC**	**Monthly**	**Nonrecurring Charge**
(g) 1+1 Protection with Central Office Survivability*			
(1) Per OC-12 Local Distribution Channel	P8T	Apply Rates and Charges as P8T above plus (2) and (3) below	
(2) Per Quarter Route Mile	S2VXY	$75.00	None
(3) Channel Mileage and Channel Mileage Terminations	1L5XX CM6	Apply Rates and Charges as 7.5.10B preceding	
(h) 1+1 Protection with Customer Premises Survivability*			
(1) Per OC-12 Local Distribution Channel	P8T	Apply Rates and Charges as P8T above plus (2) through (5) below	
(2) CPS Mileage - per air mile	1Y6WS	$220.00	
(3) CPS Termination - per wire center (as required)	CZ42X	$100.00	

* 1+1 Protection with Central Office Survivability for Telephone Company and/or Customer premises Survivability from OC-12, subscribed to on or after April 11, 2002, will no longer be available.

ACCESS SERVICE

7. Special Access Service (Cont'd)

7.5 Rates and Charges (Cont'd)

7.5.10 Optical Carrier Network (OCN) Point-to-Point Service (Cont'd)

(B) OC-12/OC-12c Service (Cont'd)

(4) Optional Features and Functions (Cont'd)

	USOC	Monthly	Nonrecurring Charge
(h) 1+1 Protection with Customer Premises Survivability* (Cont'd)			
(4) CPS OC-12 Regenerator Each (as required)	RGYDX	$1760.00	
(5) CPS Extension - per alternate customer premises	S2VAX	350.00	$700.00
(i) Shared Network Arrangement			
- Processing Charge Per Service Order	NRBOP		30.00
(j) Diversity(1)			
- Per Quarter Route Mile	S2DXY	75.00	0.00
- Per OC-12/OC-12c	CPAPB	300.00	0.00

* 1+1 Protection with Customer Premises Survivability for OC-12, subscribed to on or after April 11, 2002, will no longer be available.

(1) The Per Quarter Route Mile is required for one or both ends of the second service when both services terminate at the same customer premises.

ACCESS SERVICE

7. Special Access Service (Cont'd)

7.5 Rates and Charges (Cont'd)

7.5.10 Optical Carrier Network (OCN) Point-to-Point Service (Cont'd)

(C) OC-48/OC-48c Service*

			Recurring Charges Optional Payment Plan		
	USOC	Monthly	12 Mo.(1)	36 Mo.(1)	(D)
(1) Local Distribution Channel - Per Point of Termination Terminating Bit Rate 2488.32 Mbps	TMECS	$163,646.40	$69,671.91	$60,504.56	(I)(D)
(2) Channel Mileage Termination - Per Point of Mileage Termination 2488.32 Mbps	CM6	32,729.28	13,723.53	13,017.65	(I)(D)
(3) Channel Mileage - Per Mile 2488.32 Mbps	1L5XX	10,547.75	4,794.56	3,666.95	(I)(D)
(4) Optional Features and Functions					
(a) OC-48 Add/Drop Multiplexing** - Per Arrangement (not to exceed 12 DS3s or equivalent)	MXRFX	23,937.02	12,605.15	10,725.83	(I)(D)

(1) For term pricing plans effective on or after November 25, 2019, see terms in Section 7.2.10(F)(1) of this guidebook.

* Effective April 11, 2002, the 48-month Optional Payment Plans were grandfathered for existing customers until their term plan expires, at which time any renewed services or new contracts established on or after April 11, 2002 is no longer be available. Applicable rates for 48-month Optional Payment Plans can be found in Section 7.5.16, following.

** Concatenated services not available.

7. Special Access Service (Cont'd)

7.5 Rates and Charges (Cont'd)

7.5.10 Optical Carrier Network (OCN) Point-to-Point Service (Cont'd)

(C) OC-48/OC-48c Service (Cont'd)

(4) Optional Features and Functions (Cont'd)

	USOC	Monthly	Nonrecurring Charge	
(b) Add/Drop Function				
- Per OC-12 Add or Drop	MXJEX	$ 5,578.86	None	(I)
- Per OC-3 Add or Drop	MXJCX	2,231.57	None	(I)
- Per DS3 Add or Drop	MXJBX	1,785.24	None	(I)
- Per 1000 Base LX	MX4LX	500.00	None	
(c) Not in Use				
(d) 1+1 Protection				
- Per OC-48/OC-48c Customer Premises	P8T	1,175.00	None	
(e) 1+1 Protection with Cable Survivability(1)				
- Per OC-48/OC-48c Customer Premises	P3S	1,175.00	$700.00	
(f) 1+1 Protection with Route Survivability(1)				
(1) Per OC-12/OC-12c Customer Premises	P8T	Apply Rates and Charges as P8T above plus (2) below		
(2) Per Quarter Route Mile	S2DXY	100.00	None	

(1) Not available for OCN service originating and terminating within a Telephone Company location.

7. Special Access Service (Cont'd)

7.5 Rates and Charges (Cont'd)

7.5.10 Optical Carrier Network (OCN) Point-to-Point Service (Cont'd)

(C) OC-48/OC-48c Service (Cont'd)

(4) Optional Features and Functions (Cont'd)

	USOC	Monthly	Nonrecurring Charge
(g) 1+1 Protection with Customer Premises Survivability*			
(1) Per OC-48 Local Distribution Channel	P8T	Apply Rates and Charges as P8T above plus (2) through (5) below	
(2) CPS Mileage - per air mile	1Y6WS	$ 220.00	
(3) CPS Termination - per wire center (as required)	CZ42X	100.00	
(4) CPS OC-48 Regenerator - Each (as required)	RGYDX	2,640.00	
5) CPS Extension - per alternate customer premises	S2VAX	350.00	$700.00
(h) Point-to-Point OC-48 Regenerator - Each (as required)	RGY48	5,280.00	None
(i) Shared Network Arrangement - Processing Charge Per Service Order	NRBOP		30.00

* 1+1 Protection with Customer Premises Survivability for OC-48, subscribed to on or after April 11, 2002, will no longer be available.

ACCESS SERVICE

7. Special Access Service (Cont'd)

7.5 Rates and Charges (Cont'd)

7.5.10 Optical Carrier Network (OCN) Point-to-Point Service (Cont'd)

(C) OC-48/OC-48c Service (Cont'd)

(4) Optional Features and Functions (Cont'd)

	USOC	Monthly	Nonrecurring Charge
(i) Diversity[1]			
- Per Quarter Route Mile	S2DXY	$100.00	$0.00
- Per OC-48/OC-48c	CPAPC	700.00	0.00

(1) The Per Quarter Route Mile is required for one or both ends of the second service when both services terminate at the same customer premises.

ACCESS SERVICE

7. Special Access Service (Cont'd)
7.5 Rates and Charges (Cont'd)
7.5.10 Optical Carrier Network (OCN) Point-to-Point Service (Cont'd)
(D) OC-192/OC-192c Service*

		Recurring Charges Optional Payment Plans[1]		
	USOC	36 Mo.[2]	60 Mo.[2]	Monthly Extension
(1) Local Distribution Channel				
- Per Point of Termination Terminating Bit Rate 9953.28 Mbps	TMECS	$92,352.64(I)	$16,800.00	$237,590.33(I)
(2) Channel Mileage Termination				
- Per Point of Mileage Termination 9953.28 Mbps	CM6	$36,216.72(I)	$6,500.00	$92,935.01(I)
(3) Channel Mileage				
- Per Mile 9953.28 Mbps	1L5XX	$2,354.09(I)	$440.00	$5,252.85(I)
(4) Optional Features and Functions				
(a) OC-192 Add/Drop[3] Multiplexing*				
- Per Arrangement	MXRGX	$47,670.28(I)	$8,685.00	$110,199.61(I)

	USOC	Monthly	Nonrecurring Charge
(b) Add/Drop[3] Function Per OC-48 Add or Drop	MXJFX	$6,611.99(I)	None

(1) For Channel Mileage Termination under Optional Payment Plans subscribed to prior to July 13, 2005, see Section 7.5.16 following.

(2) For term pricing plans effective on or after November 25, 2019, see terms in Section 7.2.10(F)(1) of this guidebook.

(3) ffective November 16, 2020, regarding Add/Drop capabilities, if the number of ports falls below the minimum requirement per node, the customer must notify its Telephone Company account team/sales representative, in writing, to eliminate the charge. Upon receipt of the customer's notice and upon eligibility confirmation, the Telephone Company will remove the charge within two billing cycles.

* Concatenated services not available.

7. Special Access Service (Cont'd)

7.5 Rates and Charges (Cont'd)

7.5.10 Optical Carrier Network (OCN) Point-to-Point Service (Cont'd)

(D) OC-192/OC-192c Service (Cont'd)

(4) Optional Features and Functions (Cont'd)

	USOC	Monthly	Nonrecurring Charge	
(b) Add/Drop Function				
- Per OC-12 Add or Drop	MXJEX	$ 5,578.86	None	(I)
- Per OC-3 Add or Drop	MXJCX	2,231.57	None	(I)
- Per 1000 Base LX	MX4LX	500.00	None	
(c) Not in Use				
(d) 1+1 Protection				
- Per OC-192/OC-192c Customer Premises	P8T	5,400.00	None	
(e) 1+1 Protection with Cable Survivability(1)				
- Per OC-192/OC-192c Customer Premises	P3S	5,400.00	$800.00	
(f) 1+1 Protection with Route Survivability(1)				
(1) Per OC-192/OC-192c Customer Premises	P8T	Apply Rates and Charges as P8T above plus (2) below		
(2) Per Quarter Route Mile	S2DXY	60.00	None	
(g) Point-to-Point OC-192/OC-192c Regenerator				
- Each (as required)	RGY	11,000.00	None	

(1) Not available for OCN service originating and terminating within a Telephone Company location.

7. Special Access Service (Cont'd)

7.5 Rates and Charges (Cont'd)

7.5.10 Optical Carrier Network (OCN) Point-to-Point Service (Cont'd)

(D) OC-192/OC-192c Service (Cont'd)

( ) Optional eat res and nctions (Cont'd)

	USOC	onthl	Nonrec rring Charge
(h) Diversit [1]			
- Per uarter Route Mile	S2DX	$ 150.00	$0.00
- Per OC-192/OC-192c	CPAPD	1200.00	0.00

(1) The Per uarter Route Mile is required for one or both ends of the second service when both services terminate at the same customer premises.

ACCESS SERVICE

7. Special Access Service (Cont'd)

7.5 Rates and Charges (Cont'd)

7.5.11 OC-3, OC-12, OC-48 and OC-192 Dedicated Ring(3)(4) (Cont'd)

(A) Node

	USOC	12 Months	*Recurring Charges Optional Payment Plans*(1) 36 Months(4)	Monthly Extension	(D) (D)
Per Node:					
OC-3					
-Customer Premises					
First	FP5CX	$9,798.45	$9,798.45	$12,674.87	(I)(D)
First Re-Map(2)	RN8CX	1,770.00	1,770.00	2,120.00	(D)
Additional	FP5CA	5,535.84	5,535.84	7,174.46	(I)(D)
Additional Re-Map(2)	RN8CA	1,000.00	1,000.00	1,200.00	(D)
-Central Office	FC5CX	5,535.84	5,535.84	7,174.46	(I)(D)
OC-12					
-Customer Premises					
First	FP5DX	21,313.01	21,313.01	27,621.65	(I)(D)
First Re-Map(2)	RN8DX	3,850.00	3,850.00	4,620.00	(D)
Additional	FP5DA	14,503.92	14,503.92	18,773.15	(I)(D)
Additional Re-Map(2)	RN8DA	2,620.00	2,620.00	3,140.00	(D)
-Central Office	FC5DX	14,503.92	14,503.92	18,773.15	(I)(D)

(1) For OC-12 Additional Re-Map under 60 month Optional Payment Plans subscribed to prior to July 13, 2005, see Section 7.5.16 following.
(2) Effective August 10, 2013, availability of Re-Map nodes is limited to Re-Map nodes that are in service or have been ordered prior to August 10, 2013.
(3) Effective on August 21, 2018, AT&T will no longer offer term plans longer than 36 months, including any renewals, extensions or conversions of existing term commitments.
(4) Effective on or after December 1, 2021, neither new nor existing customers will be permitted to purchase new OC3, OC12, OC48 and OC192 Dedicated Ring Service (Service). In addition, (A) Service Payment Plans greater than 12-months in length will no longer be available; and (B) requests to move, add, change, upgrade, or downgrade existing Service arrangements will not be accepted, with the following exceptions: (1) existing customers will be permitted to modify their existing Service and will be able to add new circuits to their existing Service, but will not be permitted to add new nodes in any locations; and (2) any such new circuits will be subject to the customer's existing term payment plan or term agreement for the Service to which they are added. Following the expiration of a customer's existing term agreement, Service will be provided on a month-to-month basis at the applicable Monthly rates until the Service is discontinued.
Effective November 30, 2023, unless specified to the contrary in their existing Service agreements, existing customers may not renew Term Payment Plans or term agreements for Service. In addition, no move, add, or change orders of any type will be accepted.

ACCESS SERVICE

7. Special Access Service (Cont'd)

7.5 Rates and Charges (Cont'd)

7.5.11 OC-3, OC-12, OC-48 and OC-192 Dedicated Ring(4)(5) (Cont'd)

(A) Node (Cont'd)

	USOC	*Recurring Charges Optional Payment Plans*(1) 12 Months	36 Months(5)	Monthly Extension	
Per Node:					(D)
Direct Drop(2)					
- Customer Premises					
First	L8NDX	$3,750.00	$3,750.00	$4,470.00	
First Re-Map(3)	RL8DX	3,750.00	3,750.00	4,470.00	
Additional	L8NDA	2,520.00	2,520.00	2,990.00	
Additional Re-Map(3)	RL8DA	2,520.00	2,520.00	2,990.00	
- Central Office	L9NDX	2,520.00	2,520.00	2,990.00	
OC-48					
- Customer Premises					
First	FP5EX	32,606.13	32,606.13	42,269.49	(I)
First Re-Map(3)	RN8EX	5,890.00	5,890.00	7,070.00	
Additional	FP5EA	29,007.83	29,007.83	37,546.32	(I)
Additional Re-map(3)	RN8EA	5,240.00	5,240.00	6,280.00	
Plus(2)	FP5SX	5,240.00	5,240.00	6,280.00	
Plus Re-map(2)	RN8SX	5,240.00	5,240.00	6,280.00	
- Central Office	FC5EX	29,007.83	29,007.83	37,546.32	(I)
- Central Office Plus(2)	FC5SX	4,870.00	4,870.00	5,850.00	(D)

(1) For OC-12 Additional Re-Map under 60 month Optional Payment Plans subscribed to prior to July 13, 2005, see Section 7.5.16 following.
(2) Effective 04/08/06, the OC-48 "Plus" and Direct Drop Node features will no longer be available to new customers. There will be no change to existing customers.
(3) Effective August 10, 2013, availability of Re-Map nodes is limited to Re-Map nodes that are in service or have been ordered prior to August 10, 2013.
(4) Effective on August 21, 2018, AT&T will no longer offer term plans longer than 36 months, including any renewals, extensions or conversions of existing term commitments.
(5) Effective on or after December 1, 2021, neither new nor existing customers will be permitted to purchase new OC3, OC12, OC48 and OC192 Dedicated Ring Service (Service). In addition, (A) Service Payment Plans greater than 12-months in length will no longer be available; and (B) requests to move, add, change, upgrade, or downgrade existing Service arrangements will not be accepted, with the following exceptions: (1) existing customers will be permitted to modify their existing Service and will be able to add new circuits to their existing Service, but will not be permitted to add new nodes in any locations; and (2) any such new circuits will be subject to the customer's existing term payment plan or term agreement for the Service to which they are added. Following the expiration of a customer's existing term agreement, Service will be provided on a month-to-month basis at the applicable Monthly rates until the Service is discontinued.
Effective November 30, 2023, unless specified to the contrary in their existing Service agreements, existing customers may not renew Term Payment Plans or term agreements for Service. In addition, no move, add, or change orders of any type will be accepted.

	USOC	12 Months	36 Months[3]	Monthly Extension	(D)
OC-192					
-Customer Premises					
First	GP5AX	$121,788.57	$121,788.57	$197,297.48	(I)
First Re-Map[1]	RNFAX	19,800.00	19,800.00	33,000.00	
Additional	GP5AA	108,779.34	108,779.34	176,222.52	(I)
Additional Re-Map[1]	RNFAA	17,800.00	17,800.00	29,475.00	
-Central Office	GC5AX	108,779.34	108,779.34	175,724.30	(I)
Per node:					
Flex-Ring					
Customer Premise node for 2nd ring double on existing					
OC-12	GP5FX	$12,178.86	$12,178.86	$17,338.28	(I)
OC-48	GP5GX	21,589.80	21,589.80	26,904.21	(I)
Central Office node for 2nd ring double on existing					
OC-12	GC5FX	$10,241.31	$10,241.31	$13,153.17	(I)
OC-48	GC5GX	19,375.47	19,375.47	24,512.73	(I) (D)

(1) Effective August 10, 2013, availability of Re-Map nodes is limited to Re-Map nodes that are in service or have been ordered prior to August 10, 2013.

(2) [Deleted] (C)

(3) Effective on or after December 1, 2021, neither new nor existing customers will be permitted to purchase new OC3, OC12, OC48 and OC192 Dedicated Ring Service (Service). In addition, (A) Service Payment Plans greater than 12-months in length will no longer be available; and (B) requests to move, add, change, upgrade, or downgrade existing Service arrangements will not be accepted, with the following exceptions: (1) existing customers will be permitted to modify their existing Service and will be able to add new circuits to their existing Service, but will not be permitted to add new nodes in any locations; and (2) any such new circuits will be subject to the customer's existing term payment plan or term agreement for the Service to which they are added. Following the expiration of a customer's existing term agreement, Service will be provided on a month-to-month basis at the applicable Monthly rates until the Service is discontinued.
Effective November 30, 2023, unless specified to the contrary in their existing Service agreements, existing customers may not renew Term Payment Plans or term agreements for Service. In addition, no move, add, or change orders of any type will be accepted.

ACCESS SERVICE

7. Special Access Service (Cont'd)

7.5 Rates and Charges (Cont'd)

7.5.11 OC-3, OC-12, OC-48 and OC-192 Dedicated Ring[/5/] (Cont'd) (C)

(A) Node (Cont'd) /6/

	USOC	Nonrecurring Charge
Nonrecurring charges for subsequent installation		
-Per Node	NRBS7	$400.00
Customer Premises	NRBS7	400.00
Customer Premises Re-Map[/2/]	NRBSV	325.00
Central Office		

(B) OC-48 Add/Drop Capability[/4/] (N)

	USOC	12 Months	36 Months[/5/]	60 Months[/3//5/]	Monthly Extension (C)
Per Arrangement	MPEFX	$1,170.00	$1,170.00	$965.00	$1,450.00
Re-Map[/2/]	M8RFX	1,170.00	1,170.00	965.00	1,450.00
Plus[/1/]	MPEPX	1,040.00	1,040.00	859.00	1,290.00
Re-Map[/2/]	M8RPX	1,040.00	1,040.00	859.00	1,290.00 (N)

/1/ Effective 04/08/06, the "Plus" feature will no longer be available to new customers. There will be no change to existing customers.

/2/ Effective August 10, 2013, availability of Re-Map nodes is limited to Re-Map nodes that are in service or have been ordered prior to August 10, 2013.

/3/ Effective on August 21, 2018, AT&T will no longer offer term plans longer than 36 months, including any renewals, extensions or conversions of existing term commitments.

/4/ Effective November 16, 2020, regarding Add/Drop capabilities, if the number of ports falls below the minimum requirement per node, the customer must notify its Telephone Company account team/sales representative, in writing, to eliminate the charge. Upon receipt of the customer's notice and upon eligibility confirmation, the Telephone Company will remove the charge within two billing cycles. /6/

/5/ Effective on or after December 1, 2021, neither new nor existing customers will be permitted to purchase new OC3, OC12, OC48 and OC192 Dedicated Ring Service (Service). In addition, (A) Service Payment Plans greater than 12-months in length will no longer be available; and (B) requests to move, add, change, upgrade, or downgrade existing Service arrangements will not be accepted, with the following exceptions: (1) existing customers will be permitted to modify their existing Service and will be able to add new circuits to their existing Service, but will not be permitted to add new nodes in any locations; and (2) any such new circuits will be subject to the customer's existing term payment plan or term agreement for the Service to which they are added. Following the expiration of a customer's existing term agreement, Service will be provided on a month-to-month basis at the applicable Monthly rates until the Service is discontinued. (N)
Effective November 30, 2023, unless specified to the contrary in their existing Service agreements, existing customers may not renew Term Payment Plans or term agreements for Service. In addition, no move, add, or change orders of any type will be accepted. (N)

/6/ Material formerly appeared on Page 493.

ACCESS SERVICE

7. Special Access Service (Cont'd)

7.5 Rates and Charges (Cont'd)

7.5.11 OC-3, OC-12, OC-48 and OC-192 Dedicated Ring[/6/] (Cont'd) (C)

(B) OC-48 Add/Drop Capability (Cont'd)[/5/] (C)

	USOC	Nonrecurring Charge
Nonrecurring Charges for subsequent installation - Per Arrangement	NRBS8	$490.00

(C) OC-192 Add/Drop Capability[/5/] (C) (N)

	USOC	12 Months	36 Months[/6/]	60 Months[/4//6/]	Monthly Extension	
Per node[/1/] (not to exceed any configurable combination of ports beyond 192 STS-1 equivalents)	MXRGX	$5,000.00	$5,000.00	$4,000.00	$7,000.00	(C)
Re-Map[/2/ /3/]	M8RGX	4,500.00	4,500.00	3,600.00	7,000.00	(C) (N)

/7/

/1/ The OC-192 Add/Drop Capability charge is applied to all nodes, excluding regenerators and CO nodes without drop ports. (C)

/2/ Available for rings established on or after November 17, 2006.

/3/ Effective August 10, 2013, availability of Re-Map nodes is limited to Re-Map nodes that are in service or have been ordered prior to August 10, 2013.

/4/ Effective on August 21, 2018, AT&T will no longer offer term plans longer than 36 months, including any renewals, extensions or conversions of existing term commitments.

/5/ Effective November 16, 2020, regarding Add/Drop capabilities, if the number of ports falls below the minimum requirement per node, the customer must notify its Telephone Company account team/sales representative, in writing, to eliminate the charge. Upon receipt of the customer's notice and upon eligibility confirmation, the Telephone Company will remove the charge within two billing cycles. (C)

/6/ Effective on or after December 1, 2021, neither new nor existing customers will be permitted to purchase new OC3, OC12, OC48 and OC192 Dedicated Ring Service (Service). In addition, (A) Service Payment Plans greater than 12-months in length will no longer be available; and (B) requests to move, add, change, upgrade, or downgrade existing Service arrangements will not be accepted, with the following exceptions: (1) existing customers will be permitted to modify their existing Service and will be able to add new circuits to their existing Service, but will not be permitted to add new nodes in any locations; and (2) any such new circuits will be subject to the customer's existing term payment plan or term agreement for the Service to which they are added. Following the expiration of a customer's existing term agreement, Service will be provided on a month-to-month basis at the applicable Monthly rates until the Service is discontinued. (N)
Effective November 30, 2023, unless specified to the contrary in their existing Service agreements, existing customers may not renew Term Payment Plans or term agreements for Service. In addition, no move, add, or change orders of any type will be accepted. (N)

/7/ Material now appears on Page 494.1

ACCESS SERVICE

7. Special Access Service (Cont'd)

7.5 Rates and Charges (Cont'd)

7.5.11 OC-3, OC-12, OC-48 and OC-192 Dedicated Ring(6) (Cont'd)

(D) Ports

		USOC	12 Months	36 Months(6)	Monthly Extension	
-Per Port (excluding Re-Map						(D)
DS1	at OC-3 Node	SPRAX	$276.80	$276.80	$388.64	(I)
DS3	at OC-3 Node	SPRBX	664.31	664.31	896.81	(I)
EC-1	at OC-3 Node	S9NSX	120.00	120.00	150.00	
OC-3	at OC-3 Node	S9T1X	1,937.54	1,937.54	3,288.30	(I)
100 Mbps Ethernet (STS-1)	at OC-3 Node(2)	S9TAX	145.00	145.00	225.00	
DS3	at OC-12 (DDN)(4)	SPRMX	120.00	120.00	150.00	
DS3	at OCN-12 Node	SPRCX	664.31	664.31	896.81	(I)
EC-1	at OCN-12 Node	S9NUX	120.00	120.00	150.00	
OC-3, OC-3c	at OCN-12 Node	SPREX	830.37	830.37	1,195.74	(I)
DS1	at OCN-12 DDN)(1) (4)	SPRNX	50.00	50.00	65.00	
DS1	at OCN-12 Node(1) (3)	SPRGX	276.80	276.80	388.64	(I)
OC-12	at OC-12 Node	S9T2X	4,705.47	4,705.47	6,277.64	(I)
100 Mbps Ethernet (STS-1)	at OC-12 Node(2)	S9TBX	145.00	145.00	225.00	
100 Mbps Ethernet (STS-3c)	at OC-12 Node(2)	S9TCX	180.00	180.00	280.00	
1 Gbps Ethernet (STS-1)	at OC-12 Node(2)	S9TDX	250.00	250.00	350.00	
1 GBPS Ethernet (STS-3c)	at OC-12 Node(2)	S9TEX	250.00	250.00	350.00	(D)

(1) Optical to Electrical DS1 add/drop capability as described in 7.2.11(B)(5) is needed along with an OC-3 port unless the customer has chosen an OC-12 DDN.
(2) Effective October 2, 2003, new orders for Dedicated Ring Service and placement of an order for new Dedicated Ring Service with the EoS enhancement is required. Refer to section 7.2.11 (B)(9) for details.
(3) The Optical-to-Electrical DS1 add/drop capability will be charged when the 85th DS1 port is applied per OC-12 node.
(4) Effective 04/08/06, the Direct Drop Node (DDN) feature will no longer be available to new customers. There will be no change to existing customers.
(5) [Deleted] (C)
(6) Effective on or after December 1, 2021, neither new nor existing customers will be permitted to purchase new OC3, OC12, OC48 and OC192 Dedicated Ring Service (Service). In addition, (A) Service Payment Plans greater than 12-months in length will no longer be available; and (B) requests to move, add, change, upgrade, or downgrade existing Service arrangements will not be accepted, with the following exceptions: (1) existing customers will be permitted to modify their existing Service and will be able to add new circuits to their existing Service, but will not be permitted to add new nodes in any locations; and (2) any such new circuits will be subject to the customer's existing term payment plan or term agreement for the Service to which they are added. Following the expiration of a customer's existing term agreement, Service will be provided on a month-to-month basis at the applicable Monthly rates until the Service is discontinued.
Effective November 30, 2023, unless specified to the contrary in their existing Service agreements, existing customers may not renew Term Payment Plans or term agreements for Service. In addition, no move, add, or change orders of any type will be accepted.

ACCESS SERVICE

7.Special Access Service (Cont'd)

7.5 Rates and Charges (Cont'd)

7.5.11 OC-3, OC-12, OC-48 and OC-192 Dedicated Ring(4) (Cont'd)

(D) Ports (Cont'd)

Description			USOC	12 Months	36 Months(4)	Monthly Extension	(D)
- Per Port (excluding Re-Map) (Cont'd)							
OC12, OC12c	at OC-48	Node	SPRHX	$2,075.96	$2,075.96	$2,839.91	(I)
OC3, OC3c	at OC-48	Node	SPRJX	830.37	830.37	1,195.74	(I)
DS3	at OC-48	Node	SPRKX	664.31	664.31	896.81	(I)
EC-1	at OC-48	Node	S9NVX	120.00	120.00	150.00	
DS1	at OC-48	Node(1)	SPRLX	276.80	276.80	388.64	(I)
OC48	at OC-48	Node	S9T3X	10,518.12	10,518.12	17,039.33	(I)
100 Mbps Ethernet (STS-1)	at OC-48	Node(2)	S9TGX	145.00	145.00	225.00	
100 Mbps Ethernet (STS-3c)	at OC-48	Node(2)	S9THX	180.00	180.00	280.00	
1 Gbps Ethernet (STS-1)	at OC-48	Node(2)	S9TJX	250.00	250.00	350.00	
1 Gbps Ethernet (STS-3c)	at OC-48	Node(2)	S9TKX	250.00	250.00	350.00	
1 Gbps Ethernet (STS-12c)	at OC-48	Node(2)	S9TLX	600.00	600.00	875.00	
1 Gbps Ethernet (STS-24c)	at OC-48	Node(2)	S9TMX	900.00	900.00	1,500.00	(D)

(1) Optical-to-Electrical DS1 add/drop capability as described in 7.2.11(B)(5) is needed along with an OC-3 port unless the customer has chosen an OC-12 DDN.

(2) Effective October 2, 2003, new orders for Dedicated Ring Service with the EoS enhancement will be served by different equipment. Disconnect of the existing Dedicated Ring Service and placement of an order for new Dedicated Ring Service with the EoS enhancement is required. Refer to Section 7.2.11(B)(9) for details.

(3) [Deleted] (C)

(4) Effective on or after December 1, 2021, neither new nor existing customers will be permitted to purchase new OC3, OC12, OC48 and OC192 Dedicated Ring Service (Service). In addition, (A) Service Payment Plans greater than 12-months in length will no longer be available; and (B) requests to move, add, change, upgrade, or downgrade existing Service arrangements will not be accepted, with the following exceptions: (1) existing customers will be permitted to modify their existing Service and will be able to add new circuits to their existing Service, but will not be permitted to add new nodes in any locations; and (2) any such new circuits will be subject to the customer's existing term payment plan or term agreement for the Service to which they are added. Following the expiration of a customer's existing term agreement, Service will be provided on a month-to-month basis at the applicable Monthly rates until the Service is discontinued.
Effective November 30, 2023, unless specified to the contrary in their existing Service agreements, existing customers may not renew Term Payment Plans or term agreements for Service. In addition, no move, add, or change orders of any type will be accepted.

ACCESS SERVICE

7. Special Access Service (Cont'd)

7.5 Rates and Charges (Cont'd)

7.5.11 OC-3, OC-12, OC-48 and OC-192 Dedicated Ring(4)(5) (Cont'd)

(D) Ports (Cont'd)

Description			USOC	12 Months	36 Months(4)	Monthly Extension	
- Per Port (excluding Re-Map) (Cont'd)							(D)
OC3, OC3c	at OC-192	Node	S9NEX	$747.35	$747.35	$1,345.23	(I)
OC12, OC12c	at OC-192	Node	S9NGX	1,799.18	1,799.18	3,288.30	
OC48, OC48c	at OC-192	Node	S9NJX	4,567.08	4,567.08	8,519.69	
OC192	at OC-192	Node	S9T4X	18,268.29	18,268.29	34,078.67	
DS1	at OC-192	Node(1)	S9QWX	276.80	276.80	388.64	
DS3	at OC-192	Node	S9QGX	664.31	664.31	896.81	(I)
EC-1	at OC-192	Node(2)	S9TZX	120.00	120.00	150.00	
DS3 w/Transmux	at OC-192	Node(2)	S4NGX	250.00	250.00	300.00	
100 Mbps Ethernet (STS-1)	at OC-192	Node(2)	S9TNX	145.00	145.00	225.00	
100 Mbps Ethernet (STS-3c)	at OC-192	Node(2)	S9TOX	180.00	180.00	280.00	
1 Gbps Ethernet (STS-1)	at OC-192	Node(2)	S9TPX	250.00	250.00	350.00	
1 Gbps Ethernet (STS-3c)	at OC-192	Node(2)	S9TQX	250.00	250.00	350.00	
1 Gbps Ethernet (STS-12c)	at OC-192	Node	S9TRX	600.00	600.00	875.00	
1 Gbps Ethernet (STS-24c)	at OC-192	Node	S9TSX	900.00	900.00	1,500.00	(D)

(1) Optical-to-Electrical DS1 add/drop capability as described in 7.2.11(B)(5) is needed along with an OC-3 port unless the customer has chosen an OC-12 DDN.

(2) Effective October 2, 2003, new orders for Dedicated Ring Service with the EoS enhancement will be served by different equipment. Disconnect of the existing Dedicated Ring Service and placement of an order for new Dedicated Ring Service with the EoS enhancement is required. Refer to Section 7.2.11(B)(9) for details.

(3) [Deleted] (C)

(4) Effective on or after December 1, 2021, neither new nor existing customers will be permitted to purchase new OC3, OC12, OC48 and OC192 Dedicated Ring Service (Service). In addition, (A) Service Payment Plans greater than 12-months in length will no longer be available; and (B) requests to move, add, change, upgrade, or downgrade existing Service arrangements will not be accepted, with the following exceptions: (1) existing customers will be permitted to modify their existing Service and will be able to add new circuits to their existing Service, but will not be permitted to add new nodes in any locations; and (2) any such new circuits will be subject to the customer's existing term payment plan or term agreement for the Service to which they are added. Following the expiration of a customer's existing term agreement, Service will be provided on a month-to-month basis at the applicable Monthly rates until the Service is discontinued.

(5) Effective November 30, 2023, unless specified to the contrary in their existing Service agreements, existing customers may not renew Term Payment Plans or term agreements for Service. In addition, no move, add, or change orders of any type will be accepted.

ACCESS SERVICE

7. Special Access Service (Cont'd)

7.5 Rates and Charges (Cont'd)

7.5.11 OC-3, OC-12, OC-48 and OC-192 Dedicated Ring/6/ (Cont'd) (C)

(D) Ports (Cont'd)

Description	USOC	12 Months	36 Months/6/	60 Months/5//6/	Monthly Extension	(N) (C)
EoS Ports						
Virtual Concatenation(VCAT)/1/						
- per multiplexing function						
10/100 BaseT Ethernet Port Bandwidth options for port/2//3//4/	S5P1X	250.00	250.00	180.00	350.00 (C)	(N)
VT1.5-1v (1.6 Mbps)						
VT1.5-2v (3.2 Mbps)						
VT1.5-3v (4.8 Mbps)						
VT1.5-4v (6.4 Mbps)						
VT1.5-5v (8.0 Mbps)						
VT1.5-6v (9.6 Mbps)						
VT1.5-7v (11.2 Mbps)						
VT1.5-8v (12.4 Mbps)						
VT1.5-10v (16.0 Mbps)						
VT1.5-13v (20.8 Mbps)						
STS-1-1v (48.38 Mbps)						
STS-1-2v (96.77 Mbps)						

/7/

/1/ Nonrecurring charges apply to EoS Ports, Virtual Concatenation (VCAT). See EoS Port charges on Page 418.1.2.2, for applicable nonrecurring charges.
/2/ Actual payload capacity for selected bandwidth.
/3/ Only Single-Mode Fiber is available in the Central Office. (C)
/4/ The EoS line rates defined herein are based on the theoretical SONET payload line rates as per GR-253-CORE, Issue 4. These values are not representative of the true Ethernet transport capacity of the EoS circuit.
/5/ Effective on August 21, 2018, AT&T will no longer offer term plans longer than 36 months, including any renewals, extensions or conversions of existing term commitments. (C)
/6/ Effective on or after December 1, 2021, neither new nor existing customers will be permitted to purchase new OC3, OC12, OC48 and OC192 Dedicated Ring Service (Service). In addition, (A) Service Payment Plans greater than 12-months in length will no longer be available; and (B) requests to move, add, change, upgrade, or downgrade existing Service arrangements will not be accepted, with the following exceptions: (1) existing customers will be permitted to modify their existing Service and will be able to add new circuits to their existing Service, but will not be permitted to add new nodes in any locations; and (2) any such new circuits will be subject to the customer's existing term payment plan or term agreement for the Service to which they are added. Following the expiration of a customer's existing term agreement, Service will be provided on a month-to-month basis at the applicable Monthly rates until the Service is discontinued. (N)
Effective November 30, 2023, unless specified to the contrary in their existing Service agreements, existing customers may not renew Term Payment Plans or term agreements for Service. In addition, no move, add, or change orders of any type will be accepted. (N)
/7/ Material now appears on Page 496.1

ACCESS SERVICE

7. Special Access Service (Cont'd)

7.5 Rates and Charges (Cont'd)

7.5.11 OC-3, OC-12, OC-48 and OC-192 Dedicated Ring[/5/] (Cont'd) (C)

(D) Ports (Cont'd) /6/

Description	USOC	12 Months	36 Months[/5/]	60 Months[/4//5/]	Monthly Extension (N)(C)
1000 Base SX Ethernet Port	S5P2X	425.00	425.00	350.00	500.00
1000 Base LX Ethernet Port	S5P3X	425.00	425.00	350.00	500.00 (N)
Bandwidth options for port[/1/ /2/ /3/]					(C)
STS-1-1v (48.38 Mbps)					
STS-1-2v (96.77 Mbps)					
STS-1-3v (145.15 Mbps)					
STS-1-4v (193.54 Mbps)					
STS-1-5v (241.92 Mbps)					
STS-1-6v (290.30 Mbps)					
STS-1-9v (435.46 Mbps)					
STS-1-12v (580.61 Mbps)					
STS-1-21v (1016.06 Mbps)					
STS-3c-1v (149.76 Mbps)					
STS-3c-2v (299.52 Mbps)					
STS-3c-3v (449.28 Mbps)					
STS-3c-4v (599.04 Mbps)					
STS-3c-7v (1048.32 Mbps)					

/1/ Payload capacity for selected bandwidth applies to both SX and LX. (C)

/2/ Only Single-Mode Fiber is available in the Central Office.

/3/ The EoS line rates defined herein are based on the theoretical SONET payload line rates as per GR-253-CORE, Issue 4. These values are not representative of the true Ethernet transport capacity of the EoS circuit.

/4/ Effective on August 21, 2018, AT&T will no longer offer term plans longer than 36 months, including any renewals, extensions or conversions of existing term commitments. (C) /6/

/5/ Effective on or after December 1, 2021, neither new nor existing customers will be permitted to purchase new OC3, OC12, OC48 and OC192 Dedicated Ring Service (Service). In addition, (A) Service Payment Plans greater than 12-months in length will no longer be available; and (B) requests to move, add, change, upgrade, or downgrade existing Service arrangements will not be accepted, with the following exceptions: (1) existing customers will be permitted to modify their existing Service and will be able to add new circuits to their existing Service, but will not be permitted to add new nodes in any locations; and (2) any such new circuits will be subject to the customer's existing term payment plan or term agreement for the Service to which they are added. Following the expiration of a customer's existing term agreement, Service will be provided on a month-to-month basis at the applicable Monthly rates until the Service is discontinued (N)
Effective November 30, 2023, unless specified to the contrary in their existing Service agreements, existing customers may not renew Term Payment Plans or term agreements for Service. In addition, no move, add, or change orders of any type will be accepted. (N)

/6/ Material formerly appeared on Page 496.

ACCESS SERVICE

7. Special Access Service (Cont'd)

7.5 Rates and Charges (Cont'd)

7.5.11 OC-3, OC-12, OC-48 and OC-192 Dedicated Ring/4/ (Cont'd) (C)

(D) Ports (Cont'd)

Description	USOC	12 Months	36 Months/4/	60 Months/3//4/	Monthly Extension (C) (N)
- Per Port - Re-Map/2/ (C)					
Per DS1 Re-Map Block (consists of 28 DS1 ports) at					
OC-3 Ring	P8RAX	$1,400.00	$1,400.00	$1,260.00	$1,820.00
OC-12 Ring	P8RGX	1,400.00	1,400.00	1,260.00	1,820.00
OC-12 DDN Ring/1/	P8RNX	1,400.00	1,400.00	1,260.00	1,820.00
OC-48 Ring	P8RLX	1,400.00	1,400.00	1,260.00	1,820.00
OC-192 Ring	RN76X	1,400.00	1,400.00	1,260.00	1,820.00
- Per DS3 Re-Map Port at					
OC-3 Ring	P8RBX	120.00	120.00	110.00	150.00
OC-12 DDN Ring/1/	P8RMX	120.00	120.00	110.00	150.00
OC-192 Ring	RN71X	120.00	120.00	110.00	150.00
- Per DS-3 Re-Map Block at (consists of 3 DS3 ports) at					
OC-12 Ring	P8RCX	360.00	360.00	330.00	450.00
OC-48 Ring	P8RKX	360.00	360.00	330.00	450.00
OC-192 Ring	RN77X	360.00	360.00	330.00	400.00 (N)

/5/

/1/ Effective 04/08/06, the Direct Drop Node feature will no longer be available to new customers. There will be no change to existing customers.

/2/ Effective August 10, 2013, availability of Re-Map nodes is limited to Re-Map nodes that are in service or have been ordered prior to August 10, 2013. (C)

/3/ Effective on August 21, 2018, AT&T will no longer offer term plans longer than 36 months, including any renewals, extensions or conversions of existing term commitments. (C)

/4/ Effective on or after December 1, 2021, neither new nor existing customers will be permitted to purchase new OC3, OC12, OC48 and OC192 Dedicated Ring Service (Service). In addition, (A) Service Payment Plans greater than 12-months in length will no longer be available; and (B) requests to move, add, change, upgrade, or downgrade existing Service arrangements will not be accepted, with the following exceptions: (1) existing customers will be permitted to modify their existing Service and will be able to add new circuits to their existing Service, but will not be permitted to add new nodes in any locations; and (2) any such new circuits will be subject to the customer's existing term payment plan or term agreement for the Service to which they are added. Following the expiration of a customer's existing term agreement, Service will be provided on a month-to-month basis at the applicable Monthly rates until the Service is discontinued. (N)
Effective November 30, 2023, unless specified to the contrary in their existing Service agreements, existing customers may not renew Term Payment Plans or term agreements for Service. In addition, no move, add, or change orders of any type will be accepted. (N)

/5/ Material now appears on Page 497.1

ACCESS SERVICE

7. Special Access Service (Cont'd)

7.5 Rates and Charges (Cont'd)

7.5.11 OC-3, OC-12, OC-48 and OC-192 Dedicated Ring/3/ (Cont'd) (C)

(D) Ports (Cont'd) /4/

Description	USOC	12 Months	36 Months/3/	60 Months/2//3/	Monthly Extension (C) (N)
-					
- Per DS3 Transmux Re-Map/1/ (C)	RN7TX	$250.00	$250.00	$110.00	$300.00
- Per EC-1 Re-Map Port at					
OC-3 Ring	S9N6X	120.00	120.00	110.00	150.00
OC-12 Ring	S9N8X	120.00	120.00	110.00	150.00
OC-48 Ring	S9N9X	120.00	120.00	110.00	150.00
OC-192 Ring	S4NMX	120.00	120.00	110.00	150.00
- Per OC-3, OC-3c Re-Map Port at					
OC-12 Ring	P8REX	150.00	150.00	135.00	190.00
OC-48 Ring	P8RJX	150.00	150.00	135.00	190.00
OC-192 Ring	RN72X	150.00	150.00	135.00	190.00
- Per OC-12, OC-12c Re-Map Port at					
OC-48 Ring	P8RHX	375.00	375.00	360.00	475.00
OC-192 Ring	RN73X	375.00	375.00	360.00	475.00
- Per OC-48, OC-48c Re-Map Port at					
OC-192 Ring	RN74X	825.00	825.00	700.00	1,425.00 (N)

/1/ Available for rings established on or after November 17, 2006. (C)

/2/ Effective on August 21, 2018, AT&T will no longer offer term plans longer than 36 months, including any renewals, extensions or conversions of existing term commitments. (C) /4/

/3/ Effective on or after December 1, 2021, neither new nor existing customers will be permitted to purchase new OC3, OC12, OC48 and OC192 Dedicated Ring Service (Service). In addition, (A) Service Payment Plans greater than 12-months in length will no longer be available; and (B) requests to move, add, change, upgrade, or downgrade existing Service arrangements will not be accepted, with the following exceptions: (1) existing customers will be permitted to modify their existing Service and will be able to add new circuits to their existing Service, but will not be permitted to add new nodes in any locations; and (2) any such new circuits will be subject to the customer's existing term payment plan or term agreement for the Service to which they are added. Following the expiration of a customer's existing term agreement, Service will be provided on a month-to-month basis at the applicable Monthly rates until the Service is discontinued. (N)
Effective November 30, 2023, unless specified to the contrary in their existing Service agreements, existing customers may not renew Term Payment Plans or term agreements for Service. In addition, no move, add, or change orders of any type will be accepted. (N)

/4/ Material formerly appeared on Page 497.

ACCESS SERVICE

7. Special Access Service (Cont'd)

7.5 Rates and Charges (Cont'd)

7.5.11 OC-3, OC-12, OC-48 and OC-192 Dedicated Ring/2/ (Cont'd) (C)

(D) Ports (Cont'd)

	USOC	Nonrecurring Charge
Nonrecurring Charges for subsequent installation		
Per port type		
OC-192	NRBN2	$850.00
OC-48 or OC-48c	NRBN9	425.00
OC-12 or OC-12c	NRBSZ	400.00
OC-3 or OC-3c	NRBSW	400.00
EC-1	NRBSX	385.00
DS3	NRBSX	385.00
DS3 w/Transmux	NRBSX	385.00
DS1	NRBSY	350.00
100 Mbps Ethernet STS-1/1/	NRM63	385.00
100 Mbps Ethernet STS-3c/1/	NRM64	385.00
1 Gbps Ethernet STS-1/1/	NRM65	425.00
1 Gbps Ethernet STS-3c/1/	NRM66	425.00
1 Gbps Ethernet STS-12c/1/	NRM67	425.00
1 Gbps Ethernet STS-24c/1/	NRM68	425.00
10/100 Base T Ethernet Port	NRM63	385.00
1000 BaseLX Ethernet Port	NRM65	425.00
1000 BaseSX Ethernet Port	NRM66	425.00

/1/ Effective October 2, 2003, new orders for Dedicated Ring Service with the EoS enhancement will be served by different equipment. Disconnect of the existing Dedicated Ring Service and placement of an order for new Dedicated Ring Service with the EoS enhancement is required. Refer to Section 7.2.11(B)(9) for details.

/2/ Effective on or after December 1, 2021, neither new nor existing customers will be permitted to purchase new OC3, OC12, OC48 and OC192 Dedicated Ring Service (Service). In addition, (A) Service Payment Plans greater than 12-months in length will no longer be available; and (B) requests to move, add, change, upgrade, or downgrade existing Service arrangements will not be accepted, with the following exceptions: (1) existing customers will be permitted to modify their existing Service and will be able to add new circuits to their existing Service, but will not be permitted to add new nodes in any locations; and (2) any such new circuits will be subject to the customer's existing term payment plan or term agreement for the Service to which they are added. Following the expiration of a customer's existing term agreement, Service will be provided on a month-to-month basis at the applicable Monthly rates until the Service is discontinued. (N)
Effective November 30, 2023, unless specified to the contrary in their existing Service agreements, existing customers may not renew Term Payment Plans or term agreements for Service. In addition, no move, add, or change orders of any type will be accepted. (N)

7. Special Access Service (Cont'd)

7.5 Rates and Charges (Cont'd)

7.5.11 OC-3, OC-12, OC-48 and OC-192 Dedicated Ring[7] (Cont'd)

(E) Mileage (D)

	USOC	12 Mo.	36 Mo.[7]	Monthly Extension	
Per mile between nodes by ring type	1L5XX	$1,439.33	$1,439.33	$1,972.98	(I)
OC-3	1L5XX	1,439.33	1,439.33	1,972.98	
OC-12	1L5XX	1,439.33	1,439.33	1,972.98	
OC-48	1L5XX	1,439.33	1,439.33	1,972.98	(I)
OC-192					

(F) Optical to Electrical Add/Drop Capability[6]

	USOC	12 Mo.	36 Mo.	Monthly Extension	
Per Arrangement[1] (Per OC-192 node) not to exceed any configurable combination of ports beyond 192 STS-1 equivalents	MXJGX	$2,500.00	$2,500.00	$3,500.00	
Re-Map[2][4] Per Optical to Electrical DS-3 Add/Drop Capability	M6JGX	2,500.00	2,500.00	3,500.00	
Per OC-3 to DS1 Add/Drop[3]	MXJDX	875.00	875.00	1,050.00	(D)

(1) When electrical drops are required, the OC-192 Optical-to-Electrical Add/Drop Capability charge is applied in addition to the Add/Drop Capability charge set forth in Section 7.5.11 (C).
(2) Available for rings established on or after November 17, 2006.
(3) An OC-3 port charge is needed with each Optical-to-Electrical Add/Drop Capability – Per OC-3 to DS-1 Add/Drop.
(4) Effective August 10, 2013, availability of Re-Map nodes is limited to Re-Map nodes that are in service or have been ordered prior to August 10, 2013.
(5) [Deleted] (C)
(6) Effective November 16, 2020, regarding Add/Drop capabilities, if the number of ports falls below the minimum requirement per node, the customer must notify its Telephone Company account team/sales representative, in writing, to eliminate the charge. Upon receipt of the customer's notice and upon eligibility confirmation, the Telephone Company will remove the charge within two billing cycles.
(7) Effective on or after December 1, 2021, neither new nor existing customers will be permitted to purchase new OC3, OC12, OC48 and OC192 Dedicated Ring Service (Service). In addition, (A) Service Payment Plans greater than 12-months in length will no longer be available; and (B) requests to move, add, change, upgrade, or downgrade existing Service arrangements will not be accepted, with the following exceptions: (1) existing customers will be permitted to modify their existing Service and will be able to add new circuits to their existing Service, but will not be permitted to add new nodes in any locations; and (2) any such new circuits will be subject to the customer's existing term payment plan or term agreement for the Service to which they are added. Following the expiration of a customer's existing term agreement, Service will be provided on a month-to-month basis at the applicable Monthly rates until the Service is discontinued.
Effective November 30, 2023, unless specified to the contrary in their existing Service agreements, existing customers may not renew Term Payment Plans or term agreements for Service. In addition, no move, add, or change orders of any type will be accepted.

ACCESS SERVICE

7. Special Access Service (Cont'd)

7.5 Rates and Charges (Cont'd)

7.5.11 OC-3, OC-12, OC-48 and OC-192 Dedicated Ring[/5/] (Cont'd) (C)

(F) Optical to Electrical Add/Drop Capability[/4/] (Cont'd) /6/

	USOC	12 Mo.	36 Mo.[/5/]	60 Mo.[/3//5/]	Monthly Extension	(C) (N)
Re-Map[/2/] Per OC-3 to DS1 Add/Drop[/1/]	M8RDX	$875.00	$875.00	$700.00	%1,050.00	(C) (N) (C)

	USOC	Nonrecurring Charge
Nonrecurring Charges for subsequent installation		
Per OC-3 to DS1, Add/Drop Capability	NRBS6	$490.00

/1/ An OC-3 port charge is needed with each Optical-to-Electrical Add/Drop Capability – Per OC-3 to DS-1 Add/Drop. (C)

/2/ Effective August 10, 2013, availability of Re-Map nodes is limited to Re-Map nodes that are in service or have been ordered prior to August 10, 2013.

/3/ Effective on August 21, 2018, AT&T will no longer offer term plans longer than 36 months, including any renewals, extensions or conversions of existing term commitments.

/4/ Effective November 16, 2020, regarding Add/Drop capabilities, if the number of ports falls below the minimum requirement per node, the customer must notify its Telephone Company account team/sales representative, in writing, to eliminate the charge. Upon receipt of the customer's notice and upon eligibility confirmation, the Telephone Company will remove the charge within two billing cycles. (C) /6/

/5/ Effective on or after December 1, 2021, neither new nor existing customers will be permitted to purchase new OC3, OC12, OC48 and OC192 Dedicated Ring Service (Service). In addition, (A) Service Payment Plans greater than 12-months in length will no longer be available; and (B) requests to move, add, change, upgrade, or downgrade existing Service arrangements will not be accepted, with the following exceptions: (1) existing customers will be permitted to modify their existing Service and will be able to add new circuits to their existing Service, but will not be permitted to add new nodes in any locations; and (2) any such new circuits will be subject to the customer's existing term payment plan or term agreement for the Service to which they are added. Following the expiration of a customer's existing term agreement, Service will be provided on a month-to-month basis at the applicable Monthly rates until the Service is discontinued. (N)
Effective November 30, 2023, unless specified to the contrary in their existing Service agreements, existing customers may not renew Term Payment Plans or term agreements for Service. In addition, no move, add, or change orders of any type will be accepted. (N)

/6/ Material formerly appeared on Page 499.

ACCESS SERVICE

7. Special Access Service (Cont'd)

7.5 Rates and Charges (Cont'd)

7.5.11 OC-3, OC-12, OC-48 and OC-192 Dedicated Ring(2) (Cont'd)

(G) Dedicated Ring Regenerator

	USOC	12 Month	36 Month(2)	Monthly Extension		
						(D)
OC-3						
Each (as required)	RGY	$5,535.84	$5,535.84	$7,174.46	(I)	
OC-12						
Each (as required)	RGY	14,503.92	14,503.92	18,773.15	(I)	
OC-48						
Each (as required)	RGY	18,129.90	18,129.90	23,496.35	(I)	
OC-192						
Each (as required)	RGY	51,206.57	51,206.57	82,954.64	(I)	(D)

		Nonrecurring Charge
Nonrecurring charges for subsequent installation of Regenerator		
Each (As required)	NRBS5	$270.00

(H) Shared Network Arrangement

- Processing Charge Per Service Order	NRBOP	30.00

(1) [Deleted] (C)

(2) Effective on or after December 1, 2021, neither new nor existing customers will be permitted to purchase new OC3, OC12, OC48 and OC192 Dedicated Ring Service (Service). In addition, (A) Service Payment Plans greater than 12-months in length will no longer be available; and (B) requests to move, add, change, upgrade, or downgrade existing Service arrangements will not be accepted, with the following exceptions: (1) existing customers will be permitted to modify their existing Service and will be able to add new circuits to their existing Service, but will not be permitted to add new nodes in any locations; and (2) any such new circuits will be subject to the customer's existing term payment plan or term agreement for the Service to which they are added. Following the expiration of a customer's existing term agreement, Service will be provided on a month-to-month basis at the applicable Monthly rates until the Service is discontinued.
Effective November 30, 2023, unless specified to the contrary in their existing Service agreements, existing customers may not renew Term Payment Plans or term agreements for Service. In addition, no move, add, or change orders of any type will be accepted.

ACCESS SERVICE

7. Special Access Service (Cont'd)

7.5 Rates and Charges (Cont'd)

7.5.12 SONET press Service[/1/]

	USOC	onthl E tension	12 o.	2 o.	Rec rring Charges Optional Pa ent Plan o.	o.	0 o.
(A) Network Access Connection							
- Per DS1 Customer Premises Termination	N A1X	$157.00	$131.00	$131.00	$118.00	$118.00	$85.00
- Per DS3 Customer Premises Termination	N A3X	1,861.00	1,550.00	1,472.00	1,396.00	1,318.00	1,240.00
Per OC-12 Customer Premises Termination	N ABX	45,778.00	38,454.00	38,454.00	35,249.00	35,249.00	21,000.00
Per OC-12 Customer Premises Termination Sorted and Grouped	N GBX	33,062.00	27,772.00	27,772.00	25,788.00	25,788.00	14,878.00
(B) Off-Network Access Connection							
- Per DS1 Central Office Connection	N O1X	90.00	75.00	75.00	50.00	50.00	25.00
- Per DS3 Central Office Connection	N O3X	100.00	90.00	90.00	65.00	65.00	50.00
- Per OC-3 Central Office Connection	N OAX	444.00	370.00	370.00	335.00	335.00	295.00

/1/ Effective April 24, 2012, SONET Xpress is available only to existing Customers, for existing service arrangements. Existing Customers may continue to receive service under existing service arrangements, or on a month-to-month basis after their existing service arrangements expire, until SONET Xpress is discontinued.

ACCESS SERVICE

7. Special Access Service (Cont'd)

7.5 Rates and Charges (Cont'd)

7.5.12 SONET press Service[/1/] (Cont d)

	USOC	onthl E tension	Rec rring Charges 12 o.	2 o.	Optional Pa ent Plan o.	o.	0 o.
(B) Off-Network Access Connection (cont d)							
- Per OC-12 Central Office Connection	N OBX	$ 750.00	$625.00	$625.00	$580.00	$580.00	$550.00
(C) DS3 Payload Multiplexing Function							
- Per DS3/STS-1 to/from DS1/VT 1.5 on the Network	MPEMX	375.00	350.00	350.00	325.00	325.00	300.00

	USOC	Rec rring Charges onthl
(D) Service Area Transport		
- Per Band on the Network DS1/VT1.5 Point to Point		
- up to 3 miles	1 6AA	$ 52.00
- greater than 3 miles up to 10 miles	1 6AB	75.00
- greater than 10 miles	1 6AC	108.00
- Per Band on the Network DS3/STS-1 Point to Point		
- up to 3 miles	1 6BA	728.00
- greater than 3 miles up to 10 miles	1 6BB	1,064.00
- greater than 10 miles	1 6BC	1,512.00

/1/ Effective April 24, 2012, SONET Xpress is available only to existing Customers, for existing service arrangements. Existing Customers may continue to receive service under existing service arrangements, or on a month-to-month basis after their existing service arrangements expire, until SONET Xpress is discontinued.

ACCESS SERVICE

7. Special Access Service

7.5 Rates and Charges (Cont'd)

7.5.12 SONET press Service[/1/] (Cont d)

	USOC	Rec rring Charges onthl
(D) Service Area Transport		
- Per Band on the Network DS3, OC-3 or OC-12 channeli ed on a per DS1/VT1.5 Basis		
- up to 3 miles	1 6EA	$ 23.00
- greater than 3 miles up to 10 Miles	1 6EB	35.00
- greater than 10 Miles	1 6EC	45.00

	USOC	Nonrec rring Charge
(E) Shared Network Arrangement		
Processing Charge Per Service Order	NRBOP	$ 30.00

/1/ Effective April 24, 2012, SONET Xpress is available only to existing Customers, for existing service arrangements. Existing Customers may continue to receive service under existing service arrangements, or on a month-to-month basis after their existing service arrangements expire, until SONET Xpress is discontinued.

ACCESS SERVICE

7. Special Access Service (Cont'd)

7.5 Rates and Charges (Cont'd)

7.5.13 Gigabit Ethernet Metropolitan Area Network (GigaMAN®)(1)(2)

A. GigaMAN® Service

	USOC	Monthly Extension	Recurring Charges Term Pricing Plan 12 Months	36 Months	60 Months
(1) Local Distribution Channel					
- Per Point of Termination Terminating Bit Rate 1 Gbps	TMECS	$12,621.73(I)	$3,300.00	$2,850.00	$2,500.00
(2) Channel Mileage Termination					
- Per Point of Termination					
- Per Point of Mileage Termination 1 Gbps	CM6	$415.18(I)	$125.00	$100.00	$50.00
(3) Channel Mileage					
- Per Mile 1 Gbps	1L5XX	$415.18(I)	$125.00	$100.00	$75.00
(4) Repeater					
- each	VU4	$8,303.77(I)	$2,400.00	$1,150.00	$850.00

(5) Diversity Options

	USOC	Monthly Extension	Term Pricing Plan 12 Months	36 Months	60 Months	NRC
(a) Local Channel Diversity						
- Per Channel Terminating Bit Rate 1 Gbps	CPALX	$2,491.14(I)	$750.00	$750.00	$750.00	$0.00

(1) Effective October 29, 2017, GigaMAN Service will no longer be available for new circuits. The Company will no longer accept orders for adds, moves, changes or new term plans for GigaMAN Service, and existing term plans may not be renewed, converted or extended. Following the expiration of a customer's existing GigaMAN term agreement, service will be provided on a month-to-month basis at the applicable monthly extension rates until the service is discontinued.
(2) The Company currently plans to discontinue this Service on or after September 30, 2023.

ACCESS SERVICE

7. Special Access Service (Cont'd)

7.5 Rates and Charges (Cont'd)

7.5.13 Gigabit Ethernet Metropolitan Area Network (GigaMAN®)(1)(2) (Cont'd)

A. GigaMAN® Service (Cont'd)

	USOC	Monthly Extension	Recurring Charges Term Pricing Plan 12 Months	36 Months	60 Months	NRC
(5) Diversity Options (Cont'd)						
(b) Inter-Wire Diversity						
- Per Circuit Terminating Bit Rate 1 Gbps	CPATX	$1,660.76(I)	$500.00	$500.00	$500.00	$0.00
(c) Alternate Wire Center Diversity						
- Per Channel Terminating Bit Rate 1 Gbps	CPAAX	3,985.81(I)	1,200.00	1,200.00	1,200.00	0.00
(6) Protection - per GigaMAN® service arranged						
(a) Equipment Only Protection						
- Per Terminating End	CPAEX	4,982.26(I)	1,375.00	1,050.00	900.00	625.00
(b) Equipment Plus Alternate Wire Center Path Protection						
- Per Terminating End	CPAFX	8,170.90(I)	2,050.00	1,600.00	1,400.00	1,400.00
(c) Equipment Plus Channel Termination (Local Channel) Path Protection						
- Per Terminating End	CPAGX	7,274.11(I)	1,825.00	1,425.00	1,225.00	1,225.00

(1) Effective October 29, 2017, GigaMAN Service will no longer be available for new circuits. See footnote on Page 504.
(2) The Company currently plans to discontinue this Service on or after September 30, 2023.

ACCESS SERVICE

7. Special Access Service (Cont'd)

7.5 Rates and Charges (Cont'd)

7.5.13 Gigabit Ethernet Metropolitan Area Network (GigaMAN®)(2)(3) (Cont'd)

A. GigaMAN® Service (Cont'd)

	USOC	Monthly Extension	Recurring Charges Term Pricing Plan 12 Months	36 Months	60 Months	NRC
(6) Protection - per GigaMAN® service arranged (Cont'd)						
(d) Inter-Wire Center Path Protection - Per Circuit	CPAHX	$1,577.72(I)	$375.00	$150.00	$100.00	$625.00
(e) Power Protection(1)	VBBGX	2,325.05(I)	625.00	480.00	435.00	475.00

(1) Power Protection rate elements are applicable as set forth in 7.2.13(K)(d).
(2) Effective October 29, 2017, GigaMAN Service will no longer be available for new circuits. See footnote on Page 504.
(3) The Company currently plans to discontinue this Service on or after September 30, 2023.

7. Special Access Service (Cont'd)

7. Special Access Service (Cont'd)

7. Special Access Service (Cont'd)

7.5 Rates and Charges (Cont'd)

7. Special Access Service (Cont'd)

7. Special Access Service (Cont'd)

7. Special Access Service (Cont'd)

7. Special Access Service (Cont'd)

7. Special Access Service (Cont'd)

7. Special Access Service (Cont'd)

7. Special Access Service (Cont'd)

7. Special Access Service (Cont'd)

7. Special Access Service (Cont'd)

7. Special Access Service (Cont'd)

7. Special Access Service (Cont'd)

7. Special Access Service (Cont'd)

7. Special Access Service (Cont'd)

7. Special Access Service (Cont'd)

7. Special Access Service (Cont'd)

7. Special Access Service (Cont'd)

7. Special Access Service (Cont'd)

7. Special Access Service (Cont'd)

7. Special Access Service (Cont'd)

7. Special Access Service (Cont'd)

7. Special Access Service (Cont'd)

7. Special Access Service (Cont'd)

7. Special Access Service (Cont'd)

7. Special Access Service (Cont'd)

7. Special Access Service (Cont'd)

7. Special Access Service (Cont'd)

7. Special Access Service (Cont'd)

7. Special Access Service (Cont'd)

7.5 Rates and Charges (Cont d)

7. Special Access Service (Cont'd)

7.5 Rates and Charges (Cont d)

7. Special Access Service (Cont'd)

7.5 Rates and Charges (Cont d)

7. Special Access Service (Cont'd)

7.5 Rates and Charges (Cont d)

7. Special Access Service (Cont'd)

7.5 Rates and Charges (Cont d)

7. Special Access Service (Cont'd)

7.5 Rates and Charges (Cont d)

7. Special Access Service (Cont'd)

7.5 Rates and Charges (Cont d)

7. Special Access Service (Cont'd)

7.5 Rates and Charges (Cont d)

7. Special Access Service (Cont'd)

7.5 Rates and Charges (Cont d)

7. Special Access Service (Cont'd)

7.5 Rates and Charges (Cont d)

7. Special Access Service (Cont'd)

7.5 Rates and Charges (Cont d)

7. Special Access Service (Cont'd)

7.5 Rates and Charges (Cont d)

7. Special Access Service (Cont'd)

7.5 Rates and Charges (Cont d)

7. Special Access Service (Cont'd)

7.5 Rates and Charges (Cont'd)

/1/ Material now appears on 2nd Revised Page 445 in this Section.

7. Special Access Service (Cont'd)

7.5 Rates and Charges (Cont'd)

ACCESS SERVICE

7. Special Access Service (Cont'd)

7.5 Rates and Charges (Cont'd)

7.5.1 essage Station E ip ent Recover Charge and Special Access S rcharge

	USOC	onthl Rate
essage Station E ip ent Recover Charge		
- Per Special Access Surcharge Assessed	UTM	None
Special Access S rcharge		
- Per surcharge assessed	S25	$25.00

/1/ Material previously appeared on 1st Revised Page 444 in this Section.

7. Special Access Service (Cont'd)

7.5 Rates and Charges (Cont'd)

7.5.15 Installation and Rearrangement Charges

USOC	Administration Charge per order ORCMX	Design and Central Office Connection Charge per circuit NRBCL	Customer Connection Charge, per termination NRBBL
Metallic Service[2]	$62.04	$155.10	$258.50
Telegraph Service[2]			
- Two-wire	62.04	155.10	258.50
- Four-wire	62.04	155.10	258.50
Direct Analog Service[2]			
- Two-wire	50.00	140.00	185.00
- Four-wire	50.00	140.00	185.00
- Dedicated Access Line[2]			
- Two-wire	50.00	150.00	200.00
- Four-wire	50.00	150.00	200.00
Video Service			
Monthly, 12, 24, 36, 48 and 60 Month			
- TV1 and TV2 Wideband Analog and Serial Component Video Service	50.00	440.00	40.00
Daily			None[1]
- TV1 and TV2	50.00	None[1]	

(D)
(D)

[1] Special Construction charges may apply, subject to regulations set forth in the special construction tariffs defined in Section 1 preceding.

[2] Effective September 9, 2020, this Service will no longer be available for purchase by new or existing customers, and service agreements may no longer be renewed. In addition, requests to move, add or change existing service arrangements will not be accepted. Following the expiration of a customer's existing term agreement, service will be provided on a month-to-month basis at the applicable monthly extension rates until the service is discontinued. AT&T currently plans to discontinue this Service on or after June 30, 2024.

(D)
(D)

ACCESS SERVICE

7. Special Access Service (Cont'd)

7.5 Rates and Charges (Cont d)

7.5.15 Installation and Rearrange ent Charges (Cont d)

		Ad inistration Charge Per Order	Design Central O ice Connection Charge Per circ it	C sto er Connection Charge Per ter ination
	USOC	ORCMX	NRBL	NRBBL
Base Rate Service				
- All Speeds		50.00	150.00	200.00

7. Special Access Service (Cont'd)

7.5 Rates and Charges (Cont'd)

7.5.15 Installation and Rearrange ent Charges (Cont'd)

DS1 Service
- 1.544 Mbps

		Administration Charge per order	Design and Central Office Connection Charge per circuit	Customer Connection Charge, per termination
one 1	**USOC**	**NRB A**	**NR A**	**NR GA**
Monthly		$50.00	$300.00	$450.00
12 Month		50.00	100.00	225.00
24 Month		50.00	0.00	0.00
36 Month		50.00	0.00	0.00
48 Month		50.00	0.00	0.00
60 Month		50.00	0.00	0.00
one 2	**USOC**	**NRB B**	**NR B**	**NR GB**
Monthly		$50.00	$300.00	$450.00
12 Month		50.00	100.00	225.00
24 Month		50.00	0.00	0.00
36 Month		50.00	0.00	0.00
48 Month		50.00	0.00	0.00
60 Month		50.00	0.00	0.00
one 3	**USOC**	**NRB C**	**NR C**	**NR GC**
Monthly		$50.00	$300.00	$450.00
12 Month		50.00	100.00	225.00
24 Month		50.00	0.00	0.00
36 Month		50.00	0.00	0.00
48 Month		50.00	0.00	0.00
60 Month		50.00	0.00	0.00
one 4	**USOC**	**NR D**	**NR D**	**NR GD**
Monthly		$50.00	$300.00	$450.00
12 Month		50.00	100.00	225.00
24 Month		50.00	0.00	0.00
36 Month		50.00	0.00	0.00
48 Month		50.00	0.00	0.00
60 Month		50.00	0.00	0.00

ACCESS SERVICE

7. Special Access Service (Cont'd)

7.5 Rates and Charges (Cont'd)

7.5.15 Installation and Rearrange ent Charges (Cont'd)

DS1 Service (Cont d)
- 1.544 Mbps (Cont d)

		Administration Charge per order	Design and Central Office Connection Charge per circuit	Customer Connection Charge, per termination
one 5	**USOC**	**NR E**	**NR E**	**NR GE**
Monthly		$50.00	$300.00	$450.00
12 Month		50.00	100.00	225.00
24 Month		50.00	0.00	0.00
36 Month		50.00	0.00	0.00
48 Month		50.00	0.00	0.00
60 Month		50.00	0.00	0.00

ACCESS SERVICE

7. Special Access Service (Cont d)

7.5 Rates and Charges (Cont d)

7.5.15 Installation and Rearrange ent Charges (Cont d)

ACCESS SERVICE

7. Special Access Service (Cont d)

7.5 Rates and Charges (Cont d)

7.5.15 Installation and Rearrange ent Charges (Cont d)

ACCESS SERVICE

7. Special Access Service (Cont d)

7.5 Rates and Charges (Cont d)

7.5.15 Installation and Rearrange ent Charges (Cont d)

ACCESS SERVICE

7. Special Access Service (Cont d)

7.5 Rates and Charges (Cont d)

7.5.15 Installation and Rearrange ent Charges (Cont d)

7. Special Access Service (Cont'd)

7.5 Rates and Charges (Cont'd)

7.5.15 Installation and Rearrange ent Charges (Cont'd)

DS3 Service
- 44.736 Mbps

		Administration Charge per order	Design and Central Office Connection Charge per circuit	Customer Connection Charge, per termination
one 1	**USOC**	**NRB A**	**NR A**	**NR GA**
12 Month		$75.00	$428.00	$750.00
24 Month		75.00	257.00	450.00
36 Month		75.00	0.00	0.00
48 Month		75.00	0.00	0.00
60 Month		0.00	0.00	0.00
one 2	**USOC**	**NRB B**	**NR B**	**NR GB**
12 Month		75.00	450.00	790.00
24 Month		75.00	270.00	473.00
36 Month		75.00	0.00	0.00
48 Month		75.00	0.00	0.00
60 Month		0.00	0.00	0.00

ACCESS SERVICE

7. Special Access Service (Cont'd)

7.5 Rates and Charges (Cont'd)

7.5.15 Installation and Rearrange ent Charges (Cont'd)

DS3 Service (Cont d)
- 44.736 Mbps (Cont d)

		Administration Charge per order	Design and Central Office Connection Charge per circuit	Customer Connection Charge, per termination
one 3	**USOC**	**NRB C**	**NR C**	**NR GC**
12 Month		$75.00	$473.00	$825.00
24 Month		75.00	284.00	565.00
36 Month		75.00	0.00	0.00
48 Month		75.00	0.00	0.00
60 Month		0.00	0.00	0.00
one 4	**USOC**	**NR D**	**NR D**	**NR GD**
12 Month		75.00	486.00	860.00
24 Month		75.00	292.00	775.00
36 Month		75.00	0.00	0.00
48 Month		75.00	0.00	0.00
60 Month		0.00	0.00	0.00
one 5	**USOC**	**NR E**	**NR E**	**NR GE**
12 Month		75.00	505.00	900.00
24 Month		75.00	302.00	810.00
36 Month		75.00	0.00	0.00
48 Month		75.00	0.00	0.00
60 Month		0.00	0.00	0.00

ACCESS SERVICE

7. Special Access Service (Cont'd)

7.5 Rates and Charges (Cont d)

7.5.15 Installation and Rearrange ent Charges (Cont d)

ACCESS SERVICE

7. Special Access Service (Cont'd)

7.5 Rates and Charges (Cont d)

7.5.15 Installation and Rearrange ent Charges (Cont d)

ACCESS SERVICE

7. Special Access Service (Cont'd)

7.5 Rates and Charges (Cont d)

7.5.15 Installation and Rearrange ent Charges (Cont d)

ACCESS SERVICE

7. Special Access Service (Cont'd)

7.5 Rates and Charges (Cont d)

7.5.15 Installation and Rearrange ent Charges (Cont d)

ACCESS SERVICE

7. Special Access Service (Cont'd)

7.5 Rates and Charges (Cont d)

7.5.15 Installation and Rearrange ent Charges (Cont d)

ACCESS SERVICE

7. Special Access Service (Cont d)

7.5 Rates and Charges (Cont'd)

7.5.15 Installation and Rearrange ent Charges (Cont'd)

	USOC	Ad inistrative Charge per order ORC	Design and Central O ice Connection Charge per circ it NRBCL	C sto er Connection Charge per ter ination NRBBL
OC-3 Service - 155.52 Mbps		$60.00	$ 375.00	$450.00
OC-12 Service - 622.08 Mbps		$60.00	375.00	450.00
OC-48 Service - 2488.32 Mbps		$60.00	500.00	600.00
OC-192/OC-192c Service - 9953.28 Mbps		$60.00	2,250.00	600.00
Ethernet 100 Base		60.00		
Ethernet 1000 Base		60.00		
OC-3 Dedicated Ring		$60.00	$600.00/1/	N/A
OC-12 Dedicated Ring		$60.00	$600.00/1/	N/A
OC-48 Dedicated Ring		$60.00	$600.00/1/	N/A
OC-192 Dedicated Ring		$60.00	2,250.00/1/	N/A
SONET Xpress/2/		$60.00	None	None
STS-1 Service		$60.00		

ub Rearrangement Record Charge

- Per DS3 to DS1 Multiplexer Rearranged

	USOC	Nonrec rring Charge
one 1	NRB6A	$650.00
one 2	NRB6B	$650.00
one 3	NRB6C	$650.00
one 4	NRM6D	$650.00
one 5	NRM6E	$650.00

/1/ Per Circuit Charge for Dedicated Ring Service is applied once per original ring installed.

/2/ Effective April 24, 2012, SONET Xpress is available only to existing Customers, for existing service arrangements. Existing Customers may continue to receive service under existing service arrangements, or on a month-to-month basis after their existing service arrangements expire, until SONET Xpress is discontinued.

7. Special Access Service (Cont'd)

7.5 Rates and Charges (Cont'd)

7.5.15 Installation and Rearrange ent Charges (Cont'd)

Certain material previously appearing on this page now appears on Original Page 445.2.3.

ACCESS SERVICE

7. Special Access Service (Cont'd)

7.5 Rates and Charges (Cont'd)

7.5.15 Installation and Rearrange ent Charges (Cont'd)

ub Rearrangement Record Charge (Cont d)

- Per DS1 to Voice/Base Rate
  Multiplexer Rearranged

USOC	Charge	Nonrec rring
one 1	NRB6A	$500.00
one 2	NRB6B	500.00
one 3	NRB6C	500.00
one 4	NRM6D	500.00
one 5	NRM6E	500.00

7. Special Access Service (Cont d)

7.5 Rates and Charges (Cont'd)

7.5.15 Installation and Rearrange ent Charges (Cont d)

Re-Map Service

	USOC	Nonrecurring Charge
Initial Service Script Establishment/Test Charge	NRMR1	$2,000.00
Per OC-3 Ring	NRMR1	3,500.00
Per OC-12 Ring	NRMR2	2,000.00
Per OC-12 DDN Ring	NRMR1	4,500.00
Per OC-48 Ring	NRMR1	5,500.00
Per OC-192 Ring		
Subsequent Script Activity Charge	NRMR3	1,200.00
Per OC-3 Ring	NRMR3	2100.00
Per OC-12 Ring	NRMR4	1,200.00
Per OC-12 DDN Ring	NRMR3	2,700.00
Per OC-48 Ring	NRMR3	3,200.00
Per OC-192 Ring		
Scheduled Test Charge	NRMR5	1,600.00
Per OC-3 Ring	NRMR5	2,800.00
Per OC-12 Ring	NRMR6	1,600.00
Per OC-12 DDN Ring	NRMR5	3,600.00
Per OC-48 Ring	NRMR5	4,200.00
Per OC-192 Ring		
Emergency Re-Map Activation - per request		
	NRMR7	1,800.00
Per OC-3 Ring	NRMR7	3,150.00
Per OC-12 Ring	NRMR8	1,800.00
Per OC-12 DDN Ring	NRMR7	4,050.00
Per OC-48 Ring	NRMR7	5,000.00
Per OC-192 Ring		

ACCESS SERVICE

7. Special Access Service (Cont'd)

7.5 Rates and Charges (Cont'd)

7.5.15 Installation and Rearrangement Charges (Cont'd)

		Administrative Charge per order	Design and Central Office Connection Charge, per circuit	Customer Connection Charge per termination	
	USOC	ORCMX	NRBCL	NRBBL	
GigaMAN® /2//3/					(C)
12 Month		$60.00	230.00	$1,500.00	
36 Month		60.00	230.00/1/	1,500.00/1/	
60 Month		60.00	230.00/1/	1,500.00/1/	
Renewal GigaMAN® Service 1, 3, & 5 Year TPP		60.00	N/A	N/A	

/1/ The Administrative, Design Central Office Connection and Customer Connection nonrecurring charges will be waived for 36 and 60-months terms for new service.

/2/ Effective October 29, 2017, GigaMAN Service will no longer be available for new circuits. The Company will no longer accept orders for adds, moves, changes or new term plans for GigaMAN Service, and existing term plans may not be renewed, converted or extended. Following the expiration of a customer's existing GigaMAN term agreement, service will be provided on a month-to-month basis at the applicable monthly extension rates until the service is discontinued.

/3/ The Company currently plans to discontinue this Service on or after September 30, 2023. (N)

7. Special Access Service (Cont'd)

7.5 Rates and Charges (Cont'd)

7.5.1 Optional Pa ent Plan Vintage Rates

A. General Reg lations

Optional Payment Plan (OPP) vintage rates are those rates that apply to existing services provided under an OPP term in the event the Telephone Company initiates a rate increase. Vintage rates as set forth following are classified as vintage because the Telephone Company ensures that rates provided under an OPP term will not be increased by the Telephone Company above the OPP rate in effect at the beginning of the customer s OPP term. Each Telephone Company ire Center has been assigned to a rate one. To determine the rate one wire center assignments use the following:

- For OPP terms in effect prior to March 17, 2001, wire center rate area assignments can be found in ILL. C.C. NO 20. Part 4, Section 2,
- For OPP terms in effect on or after March 17, 2001, wire center rate one assignments can be found in the National Exchange Carrier Association, Inc. (NECA) F.C.C. Tariff No. 4.

Customers under their current OPP term will continue to pay the rates as shown in Section 7.5.16(B) until such time as:

- the effective tariff rate in Section 7.5.9 becomes lower than the vintage rate,
- the assignment of a new rate one involves a lower rate,
- the customer s existing OPP term expires, or
- the service is terminated by the customer.

In addition, other customer modifications, other than termination, that cause a new rate or OPP term to be established will result in the service becoming non-vintage and the rates as specified in Section 7.5.5 through 7.5.12 will apply.

B Vintage Rates

1. The following rates apply to DS3 Services installed prior to July 13, 2005, unless rates as specified under Section 7.5.9(C) are lower, in which case the referenced rates apply.

   Optional Features and Functions
   Interconnection Central Office Multiplexing Per Arrangement
   DS3 to DS1

	Recurring Charges Optional Payment Plan		
	USOC	12 Mo.	24 Mo.
one 1	M3XA		555.00
one 2	M3XB	595.00	585.00
one 3	M3XC	605.00	
one 4	M3XD	630.00	
one 5	M3XE		630.00

7. Special Access Service (Cont'd)

A. Rates and Charges (Cont'd)

1. Optional Pa ent Plan Vintage Rates (Cont'd)

B. Vintage Rates (cont d)

2. The following rates apply to Optical Carrier Network (OCN) Point-to-Point Service installed prior to July 13, 2005, unless rates as specified under Section 7.5.10(D) are lower, in which case the referenced rates apply.

OC-192/OC-192c Service

Channel Mileage
Termination
- Per Point of
  Mileage Termination
  9953.28 Mbps

	Recurring Charges	
	Optional Payment Plan	
USOC	36 Month	60 Month
CM6	$4,260.00	$4,020.00

ACCESS SERVICE

7. Special Access Service (Cont'd)

7.5 Rates and Charges (Cont'd)

7.5.1 Optional Pa ent Plan Vintage Rates (Cont'd)

B. Vintage Rates (Cont'd)

3. The following rate apply to OC-12 Dedicated Ring Service installed prior to July 13, 2005, unless rate as specified under Section 7.5.11(A) is lower, in which case the refernced rate apply.

OC12

		onth Optional Payment Plan
- Customer Premise Additional Re-Map	RN8DA	$2,000.00

7. Special Access Service (Cont'd)

7.5 Rates and Charges (Cont'd)

7.5.1 Optional Pa ent Plan Vintage Rates (Cont'd)

B. Vintage Rates (Cont'd)

7. Special Access Service (Cont'd)

7.5 Rates and Charges (Cont'd)

7.5.1 Optional Pa ent Plan Vintage Rates (Cont d)

B. Vintage Rates (Cont d)

7. Special Access Service (Cont'd)

7.5 Rates and Charges (Cont'd)

7.5.1 Optional Pa ent Plan Vintage Rates (Cont d)

B. Vintage Rates (Cont d)

7. Special Access Service (Cont'd)

7.5 Rates and Charges (Cont'd)

7.5.1 Optional Pa ent Plan Vintage Rates (Cont d)

B. Vintage Rates (Cont d)

7. Special Access Service (Cont'd)

7.5 Rates and Charges (Cont'd)

7.5.1 Optional Pa ent Plan Vintage Rates (Cont d)

B. Vintage Rates (Cont d)

7. Special Access Service (Cont'd)

7.5 Rates and Charges (Cont'd)

7.5.1 Optional Pa ent Plan Vintage Rates (Cont d)

B. Vintage Rates (Cont d)

7. Special Access Service (Cont'd)

7.5 Rates and Charges (Cont'd)

7.5.1 Optional Pa ent Plan Vintage Rates (Cont d)

B. Vintage Rates (Cont d)

7. Special Access Service (Cont'd)

7.5 Rates and Charges (Cont'd)

7.5.1 Optional Pa ent Plan Vintage Rates (Cont d)

B. Vintage Rates (Cont d)

7. Special Access Service (Cont'd)

7.5 Rates and Charges (Cont'd)

7.5.1 Optional Pa ent Plan Vintage Rates (Cont d)

B. Vintage Rates (Cont d)

7. Special Access Service (Cont'd)

7.5 Rates and Charges (Cont'd)

7.5.1 Optional Pa ent Plan Vintage Rates (Cont d)

B. Vintage Rates (Cont d)

7. Special Access Service (Cont'd)

7.5 Rates and Charges (Cont'd)

7.5.1 Optional Pa ent Plan Vintage Rates (Cont d)

B. Vintage Rates (Cont d)

ACCESS SERVICE

7. Special Access Service (Cont d)

7.5 Rates and Charges (Cont d)

7.5.1 Optional Pa ent Plan Vintage Rates (Cont d)

B. Vintage Rates (Cont d)

12. The following rates apply to DS3 services installed prior to July 27, 2000, unless rates as specified under 7.5.9(C) are lower, in which case the referenced rates apply.

			Rec rring Charges *Optional Payment Plan*		
	12 onths	**2 onths**	**onths**	**onths**	**0 onths**
Local Distri tion Channel - Per point o Ter ination DS LDC with Electrical Inter ace					
Area A T UPA		$2,160.00		$1,134.00	
Area B T UPB	$2,539.00	2,218.00		1,155.00	
Area C T UPC		2,370.00	$1,348.00	1,219.00	
Channel ileage Ter ination - Per Point o Ter ination					
Area A C 4XA		324.10			
Area B C 4XB		324.10	299.44	290.63	
Area C C 4XC	350.00	324.10	299.44	290.63	$281.82

ACCESS SERVICE

7. Special Access Service (Cont'd)

7.5 Rates and Charges (Cont d)

7.5.1 Optional Pa ent Plan Vintage Rates (Cont d)

B. Vintage Rates (Cont d)

12. The ollowing rates appl to DS services installed prior to l 27 2000 nless rates as speci ied nder 7.5.9(C) are lower in which case the re erenced rates appl . (Cont d)

		Rec rring Charges *Optional Payment Plan*		
		12 onths	**2 onths**	**onths**
Channel ileage - Per ile				
Area A I	XA			$59.64
Area B I	XB		$100.00	59.64
Area C I	XC	$110.00	100.00	74.64
Interconnection Central O ice ltiple ing - Per Arrange ent - DS to DS1				
Area A	M3XA			
Area B	M3XB		585.12	
Area C	M3XC		585.12	524.70

ACCESS SERVICE

7. Special Access Service (Cont'd)

7.5 Rates and Charges (Cont d)

7.5.1 Optional Pa ent Plan Vintage Rates (Cont d)

B. Vintage Rates (Cont d)

12. The ollowing rates appl to DS1 services installed prior to l 27 2000 nless rates as speci ied nder 7.5.15 are lower in which case the re erenced rates appl .

Installation and Rearrange ent Charges

		C sto er Connection Charge Per Ter ination	
	USOC	12 onths	2 onths
DS1 Service - 1.5 ps.			
Area A	NRBBA	$200.00	$200.00
Area B	NRBBB	230.00	230.00
Area C	NRBBC	260.00	260.00

ACCESS SERVICE

7. Special Access Service

7.5 Rates and Charges (Cont'd)

7.5.1 Optional Pa ent Plan Vintage Rates (Cont'd)

B. Vintage Rates (Cont'd)

1 . The ollowing rates appl to DS1 services installed prior to arch 17 2001 nless rates as speci ied nder 7.5.9(B) are lower in which case the re erenced rates appl .

Local Distri tion Channel -Per Point o Ter ination -Ter inating Bit Rate 1.5 ps		**Rec rring Charges Optional Pa ent Plan**					**Disco nt Co it ent Progra /1/**	
	USOC	**12 o.**	**2 o.**	**o.**	**o.**	**0 o.**	**o.**	**0 o.**
Area A	F A1A	$205.00	$205.00	$124.56	$124.56	$112.00	$134.87	$127.38
Area B	F A1B	211.00	211.00	128.71	128.71	115.40	139.36	131.62
Area C	F A1C	253.00	253.00	138.40	138.40	125.00	149.85	141.53

Ter inating Bit Rate 12 .0 25 .0 and .0 K ps ithin Network Access Area		**Rec rring Charges Optional Pa ent Plan**			**Disco nt Co it ent Progra /1/**	
	USOC	**12 o.**	**o.**	**0 o.**	**o.**	**0 o.**
Area A	F A1A	126.00	112.00	101.00	134.87	127.38
Area B	F A1B	140.00	125.00	113.00	139.36	131.62
Area C	F A1C	154.00	137.00	124.00	149.85	141.53

DAL /2/ (1.5 ps)		**Rec rring Charges Optional Pa ent Plan**					**Disco nt Co it ent Progra /1/**	
	USOC	**12 o.**	**2 o.**	**o.**	**o.**	**0 o.**	**o.**	**0 o.**
Area A	F A1A	205.00	205.00	124.56	124.56	112.00	134.87	127.38
Area B	F A1B	211.00	211.00	128.71	128.71	115.40	139.36	131.62
Area C	F A1C	253.00	253.00	138.40	138.40	125.00	149.85	141.53

/1/ DCP is not available for DS1 Local Distribution Channels (LDC) associated with 128, 256 and 384 bps Channel Mileage Termination and Channel Mileage, installed after January 26, 2001.

/2/ An DS1 DAL is available only when the ATS serving office is an appropriately equipped digital switch.

ACCESS SERVICE

7. Special Access Service (Cont'd)

7.5 Rates and Charges (Cont'd)

7.5.1 Optional Pa ent Plan Vintage Rates (Cont d)

(B) Vintage Rates (Cont d)

1 . The ollowing rates appl to DS1 services installed prior to arch 17 2001 nless rates as speci ied nder 7.5.9(B) are lower in which case the re erenced rates appl .

								Disco nt
				Rec rring Charges			Co it ent	
				Optional Pa ent Plan			Progra	
USOC		12 o.	2 o.	o.	o.	0 o.	o.	0 o.
Channel ileage Ter ination								
- Per Point o Ter ination								
- 1.5 ps								
Area A	C 4XA	$71.00	$71.00	$37.89	$37.89	$24.80	$47.99	$38.78
Area B	C 4XB	71.00	71.00	37.89	37.89	24.80	47.99	38.78
Area C	C 4XC	71.00	71.00	47.45	47.45	42.51	51.61	48.74
Channel ileage								
- Per ile								
- 1.5 ps								
Area A	1 XA	$23.00	$23.00	$15.82	$15.82	$13.84	$18.68	$17.65
Area B	1 XB	23.00	23.00	15.82	15.82	13.84	18.68	17.65
Area C	1 XC	23.00	23.00	15.82	15.82	13.84	18.68	17.65

7. Special Access Service (Cont'd)

7.5 Rates and Charges (Cont'd)

7.5.1 Optional Pa ent Plan Vintage Rates (Cont d)

(B) Vintage Rates (Cont d)

ACCESS SERVICE

7. Special Access Service

7.5 Rates and Charges (Cont'd)

7.5.16 Optional Payment Plan Vintage Rates (Cont'd)

(B) Vintage Rates (Cont'd)

14. The following rates apply to DS1 services installed prior to March 17, 2001, unless rates as specified under 7.5.9(B) are lower, in which case the referenced rates apply.

Interconnection Central Office Multiplexing

- DS1 to Voice/ Base Rate/128.0, 256.0, 384.0 Kbps Transport*		**Recurring Charges Optional Payment Plan**					**Discount Commitment Program**	
	USOC	**12 Mo.**	**24 Mo.**	**36 Mo.**	**48 Mo.**	**60 Mo.**	**36 Mo.**	**60 Mo.**
Area A	QMVXA	$250.00	$250.00	$195.00	$195.00	$175.00	$274.50	$259.25
Area B	QMVXB	260.00	260.00	200.00	200.00	180.00	274.50	259.25
Area C	QMVXC	270.00	270.00	205.00	205.00	185.00	274.50	259.25

NRS System Location Port Termination

- DS1 Termination						
Area A	PQD1A	45.60	44.16	40.80	39.60	38.40
Area B	PQD1A	45.60	44.16	40.80	39.60	38.40
Area C	PQD1A	45.60	44.16	40.80	39.60	38.40

(D)
(D)

ACCESS SERVICE

7. Special Access Service (Cont'd)

7.5 Rates and Charges (Cont'd)

7.5.1 Optional Pa ent Plan Vintage Rates (Cont d)

(B) Vintage Rates (Cont d)

1 . The ollowing rates appl to DS1 services installed prior to arch 17 2001 nless rates as speci ied nder 7.5.9(B) are lower in which case the re erenced rates appl .

		Rec rring Charges				
				Optional Pa ent Plan		
Description	**USOC**	**12 onth**	**2 onth**	**onth**	**onth**	**0 onths**
Local Distri tion Channel						
- Per Point o Ter ination (Cont'd)						
Ter inating Bit Rate .7 ps						
DS LDC ith Electrical Inter ace						
Area A	T UPA	2,470.00	2,470.00	1,250.00	1,250.00	1,000.00
Area B	T UPB	2,540.00	2,540.00	1,300.00	1,300.00	1,040.00
Area C	T UPC	2,800.00	2,800.00	1,350.00	1,350.00	1,080.00

ACCESS SERVICE

7. Special Access Service (Cont'd)

7.5 Rates and Charges (Cont'd)

7.5.1 Optional Pa ent Plan Vintage Rates (Cont d)

(B) Vintage Rates (Cont d)

15. The ollowing rates appl to DS services installed prior to arch 17 2001 nless rates as speci ied nder 7.5.9(C) are lower in which case the re erenced rates appl .

			Recurring Charges				
			Optional Payment Plan				
		USOC	12 Month	24 Month	36 Month	48 Month	60 Months
Ter inating Bit Rate .7 ps							
DS Service Package with Optical inter ace - Per Package							
Area A	DS3012	PCG3A	$15,750.00	$15,750.00	$6,125.00	$6,125.00	$3,750.00
	DS3024	PCG3A	23,625.00	23,625.00	8,750.00	8,750.00	5,000.00
Area B	DS3012	PCG3B	15,750.00	15,750.00	6,125.00	6,125.00	3,750.00
	DS3024	PCG3B	23,625.00	23,625.00	8,750.00	8,750.00	5,000.00
Area C	DS3012	PCG3C	15,750.00	15,750.00	6,125.00	6,125.00	3,750.00
	DS3024	PCG3C	23,625.00	23,625.00	8,750.00	8,750.00	5,000.00

ACCESS SERVICE

7. Special Access Service (Cont'd)

7.5 Rates and Charges (Cont'd)

7.5.1 Optional Pa ent Plan Vintage Rates (Cont d)

(B) Vintage Rates (Cont d)

15. The ollowing rates appl to DS services installed prior to arch 17 2001 nless rates as speci ied nder 7.5.9(C) are lower in which case the re erenced rates appl .

		Recurring Charges				
		Optional Payment Plan				
	USOC	12 Month	24 Month	36 Month	48 Month	60 Months
Channel ileage Ter ination - Per Point o Ter ination						
Area A	C 4XA	$325.00	$325.00	$275.00	$275.00	$250.00
Area B	C 4XB	350.00	350.00	300.00	300.00	275.00
Area C	C 4XC	400.00	400.00	350.00	350.00	325.00
Channel ileage - Per ile						
Area A	1 XA	100.00	100.00	60.00	60.00	35.00
Area B	1 XB	110.00	110.00	65.00	65.00	40.00
Area C	1 XC	120.00	120.00	75.00	75.00	50.00

ACCESS SERVICE

7. Special Access Service (Cont'd)

7.5 Rates and Charges (Cont'd)

7.5.1 Optional Pa ent Plan Vintage Rates (Cont d)

(B) Vintage Rates (Cont d)

15. The ollowing rates appl to DS services installed prior to arch 17 2001 nless rates as speci ied nder 7.5.9(C) are lower in which case the re erenced rates appl .

		Recurring Charges				
		Optional Payment Plan				
	USOC	12 Month	24 Month	36 Month	48 Month	60 Months
Interconnection Central O ice ltiple ing - Per Arrange ent DS to DS1						
Area A	M3XA	$575.00	$575.00	$475.00	$475.00	$450.00
Area B	M3XB	600.00	600.00	500.00	500.00	475.00
Area C	M3XC	625.00	625.00	525.00	525.00	500.00

ACCESS SERVICE

7. Special Access Service (Cont'd)

7.5 Rates and Charges (Cont'd)

7.5.1 Optional Pa ent Plan Vintage Rates (Cont d)

(B) Vintage Rates (Cont d)

15. The ollowing rates appl to DS services installed prior to arch 17 2001 nless rates as speci ied nder 7.5.9(C) are lower in which case the re erenced rates appl .

		Recurring Charges				
		Optional Payment Plan				
	USOC	12 Month	24 Month	36 Month	48 Month	60 Months
NRS S ste Location Port Ter ination						
- Per DS3 Termination						
Area A	R6SXA	$166.25	$161.00	$148.75	$144.00	$140.00
Area B	R6SXB	166.25	161.00	148.75	144.00	140.00
Area C	R6SXC	166.25	161.00	148.75	144.00	140.00

ACCESS SERVICE

7. Special Access Service (Cont'd)

7.5 Rates and Charges (Cont'd)

7.5.1 Optional Pa ent Plan Vintage Rates (Cont'd)

(B) Vintage Rates (Cont'd)

1 . The ollowing rates appl to OC- services installed prior to April 11 2002 nless rates as speci ied nder Section 7.5.9 (C) are lower in which case the re erenced rates appl .

		Recurring Charges Optional Payment Plan		
	USOC	12 Mo.	24 Mo.	48 Mo.*
Local Distribution Channel				
- Per Point of Termination Terminating Bit Rate 155.52 Mbps	TMECS	$1,607.00	$1,607.00	$1,368.00
Channel Mileage Termination				
- Per Point of Termination				
- Per Point of Mileage Termination 155.52 Mbps	CM6	$469.00	$469.00	$399.00
Channel Mileage				
- Per Mile 155.52 Mbps	1L5XX	$250.00	$250.00	$213.00
Optional Features and Functions				
(a) OC-3 Add/Drop Multiplexing				
- Per Arrangement	MPECX	$1,107.00	$1,107.00	$939.00

* See 7.5.16(B) 8 for rates applicable for 48 month Optional Payment Plan services installed prior to September 14, 1999.

ACCESS SERVICE

7. Special Access Service (Cont'd)

7.5 Rates and Charges (Cont'd)

7.5.1 Optional Pa ent Plan Vintage Rates (Cont'd)

(B) Vintage Rates (Cont'd)

1 . The ollowing rates appl to OC-12 services installed prior to April 11 2002 nless rates as speci ied nder Section 7.5.9 (C) are lower in which case the re erenced rates appl .

		Recurring Charges Optional Payment Plan		
	USOC	12 Mo.	24 Mo.	48 Mo.*
Local Distribution Channel Per Point of Termination Terminating Bit Rate 622.08 Mbps	TMECS	$4,000.00	$4,000.00	$3,400.00
Channel Mileage Termination - Per Point of Termination - Per Point of Mileage Termination 622.08 Mbps	CM6	$700.00	$700.00	$595.00
Channel Mileage - Per Mile 622.08 Mbps	1L5XX	$500.00	$500.00	$425.00
Optional Features and Functions (a) OC-12 Add/Drop Multiplexing - Per Arrangement	MPEDX	$2,750.00	$2,750.00	$2,340.00

* See 7.5.16 (B) 9 for rates applied for 48 month Optional Payment Plan services installed prior to September 14, 1999.

ACCESS SERVICE

7. Special Access Service

7.5 Rates and Charges (Cont'd)

7.5.1 Optional Pa ent Plan Vintage Rates (Cont'd)

(B) Vintage Rates (Cont'd)

1 . The ollowing rates appl to OC- services installed prior to April 11 2002 nless rates as speci ied nder Section 7.5.9 (C) are lower in which case the re erenced rates appl .

		Rec rring Charges		
			Optional Pa ent Plan	
	USOC	12 o.	2 o.	o.*
Local Distribution Channel				
- Per Point of Termination Terminating Bit Rate 2488.32 Mbps	TMECS	$8,000.00	$8,000.00	6,600.00
Channel Mileage Termination				
- Per Point of Mileage Termination 2488.32 Mbps	CM6	1,575.00	1,575.00	1,420.00
Channel Mileage				
- Per Mile 2488.32 Mbps	1L5XX	550.00	550.00	400.00
Optional Features and Functions				
(a) OC-48 Add/Drop* Multiplexing - Per Arrangement (not to exceed 12 DS3s or equivalent)	MXRFX	1,375.00	1,375.00	1,170.00

* See Section 7.5.16 (B) 10 for rates applicable for 48 month Optional Payment Plan services installed prior to September 14, 1999.

ACCESS SERVICE

7. Special Access Service (Cont'd)

7.5 Rates and Charges (Cont'd)

7.5.1 Optional Pa ent Plan Vintage Rates (Cont'd)

(B) Vintage Rates (Cont'd)

17. The ollowing rates appl to OC- /OC- c services installed prior to Septe er 2 2002 nless rates as speci ied nder Section 7.5.9(C) are lower in which case the re erenced rates appl .

	USOC	12 onth	onth	0 onth
Channel Mileage				
-Per Mile 155.52 Mbps	1L5XX	$250.00	$213.00	$200.00

7. Special Access Service (Cont'd)

7. Special Access Service (Cont'd)

7. Special Access Service (Cont'd)

7. Special Access Service (Cont'd)

7. Special Access Service (Cont'd)

7. Special Access Service (Cont'd)

7. Special Access Service (Cont'd)

ACCESS SERVICE

7. Special Access Service (Cont'd)

7.5 Rates and Charges (Cont'd)

7.5.1 Optional Pa ent Plan Vintage Rates (Cont'd)

1 . The ollowing rates appl to DS1 Services installed etween arch 17 2001 and l 1 200 .

	USOC	12 Mo.	36 Mo.	48 Mo.
NRS Location Port Terminations				
- DS1 Termination				
Illinois				
one 1	P D1A	$45.60	$40.80	$39.60
one 2	P D1B	45.60	40.80	39.60
one 3	P D1C	45.60	40.80	39.60
one 4	P D1D	45.60	40.80	39.60
one 5	P D1E	45.60	40.80	39.60

7. Special Access Service (Cont'd)

7. Special Access Service (Cont'd)

7. Special Access Service (Cont'd)

7. Special Access Service (Cont'd)

ACCESS SERVICE

7. Special Access Service (Cont'd)

7.5 Rates and Charges (Cont'd)

7.5.1 Optional Pa ent Plan Vintage Rates (Cont'd)

1 . The ollowing rates appl to DS Services installed etween arch 17 2001 and l 1 200 . (Cont'd)

	USOC	12 Mo.	36 Mo.	48 Mo.	60 Mo.
NRS System Location Port Terminations					
- DS3 Termination					
Illinois					
one 1	R6SXA	$191.00	$149.00	$149.00	$140.00
one 2	R6SXB	191.00	149.00	149.00	140.00
one 3	R6SXC	191.00	149.00	149.00	140.00
one 4	R6SXD	191.00	149.00	149.00	140.00
one 5	R6SXE	191.00	149.00	149.00	140.00

7. Special Access Service (Cont'd)

7. Special Access Service (cont'd)

7.5 Rates and Charges (cont d)

7.5.1 Optional Pa ent Plan Vintage Rates (cont'd)

20. The following rates apply to Direct Analog Service installed between August 1, 2003 through July 16, 2004.

	USOC	Discount Commitment Program 36 Mo.	Discount Commitment Program 60 Mo.
- Local Distribution Channel			
- Direct Analog Service			
- Per point of termination			
- Two- ire	T6E2X	$17.00	$12.00
- Four- ire	T6E4X	22.00	20.00
- Dedicated Access Line			
- Per point of termination*			
- Two- ire	X2	17.00	14.00

7. Individ al Case ilings

7. Special Access Service (Cont'd)

7. Individ al Case ilings (Cont'd)

7. Special Access Service (Cont'd)

7. Individ al Case ilings (Cont'd)

7. Special Access Service (Cont'd)

7. Individ al Case ilings (Cont'd)

7. Special Access Service (Cont'd)

7. Individ al Case ilings (Cont'd)

7. Special Access Service (Cont'd)

7. Individ al Case ilings (Cont'd)

7. Special Access Service (Cont'd)

7. Individ al Case ilings (Cont'd)

7. Special Access Service (Cont'd)

7. Individ al Case ilings (Cont'd)

7. Special Access Service (Cont'd)

7. Individ al Case ilings (Cont'd)

7. Special Access Service (Cont'd)

7. Individ al Case ilings (Cont'd)

7. Special Access Service (Cont'd)

7. Individ al Case ilings (Cont'd)

7. Special Access Service (Cont'd)

7. Individ al Case ilings (Cont'd)

7. Special Access Service (Cont'd)

7. Individ al Case ilings (Cont'd)

7. Special Access Service (Cont'd)

7. Individ al Case ilings (Cont'd)

7. Special Access Service (Cont'd)

7. Individ al Case ilings (Cont'd)

7. Special Access Service (Cont'd)

7. Individ al Case ilings (Cont'd)

7. Special Access Service (Cont'd)

7. Individ al Case ilings (Cont'd)

7. Special Access Service (Cont'd)

7. Individ al Case ilings (Cont'd)

ACCESS SERVICE

7. Special Access Service (Cont'd)

7. Individ al Case ilings (Cont'd)

7. Special Access Service (Cont'd)

7. Individ al Case ilings (Cont'd)

7. Special Access Service (Cont'd)

7. Individ al Case ilings (Cont'd)

7. Special Access Service (Cont'd)

7. Individ al Case ilings (Cont'd)

7. Special Access Service (Cont'd)

7. Individ al Case ilings (Cont'd)

7. **Special Access Service (Cont'd)**

7. **Call-in at Lease - Usage (Cont'd)**

ACCESS SERVICE

7. Special Access Service (Cont'd)

7. Individual Case Filings (Cont'd)

ACCESS SERVICE

7. Special Access Service (Cont'd)

7. Individual Case Filings (Cont'd)

ACCESS SERVICE

7. Special Access Service (Cont'd)

7. Individual Case Pricings (Cont'd)

ACCESS SERVICE

7. Special Access Service (Cont'd)

7. Individual Case Filings (Cont'd)

Customer Description		USOC	Monthly Rate	Nonrecurring Charge
National Guardian	Telemetry and Alarm Bridging Active Bridging - Split Band			
	Split Band Bridging - Per channel connected	CNLRX	$23.58	None

Added material per Transmittal No. 553.

A

7. Special Access Service (Cont'd)

7.8 AT&T DEDICATED ETHERNET SERVICE

7.8.1 Service Description

For service description, terms and conditions, and pricing, please see AT&T Dedicated Ethernet Service described in the AT&T Ethernet Service Guide found at the following website: (C)

(D)

https://cpr.att.com/pdf/commonEthServGuide.html (N)

Material from Page 682 through Page 699 is hereby deleted in its entirety. (N)

(D)

(D)

(D)

ACCESS SERVICE

(D)

(D)

(D)

(D)

(D)

(D)

(D)

ACCESS SERVICE

(D)

(D)

(D)

(D)

ACCESS SERVICE

(D)

(D)

(D)

(D)

(D)

7. Special Access Service (Cont'd)

7. Special Access Service (Cont'd)

7. Special Access Service (Cont'd)

7. Special Access Service (Cont'd)

7. Special Access Service (Cont'd)

7. Special Access Service (Cont'd)

7. Special Access Service (Cont'd)

7. Special Access Service (Cont'd)

7. Special Access Service (Cont'd)

7. Special Access Service (Cont'd)

7. Special Access Service (Cont'd)

7. Special Access Service (Cont'd)

7. Special Access Service (Cont'd)

7. Special Access Service (Cont'd)

7. Special Access Service (Cont'd)

7. Special Access Service (Cont'd)

7. Special Access Service (Cont'd)

7. Special Access Service (Cont'd)

7. Special Access Service (Cont'd)

7. Special Access Service (Cont'd)

7. Special Access Service (Cont'd)

7. Special Access Service (Cont'd)

7. Special Access Service (Cont'd)

7. Special Access Service (Cont'd)

7. Special Access Service (Cont'd)

7. Special Access Service (Cont'd)

7. Special Access Service (Cont'd)

7. Special Access Service (Cont'd)

7. Special Access Service (Cont'd)

7. Special Access Service (Cont'd)

7. Special Access Service (Cont'd)

7. Special Access Service (Cont'd)

7. Special Access Service (Cont'd)

7. Special Access Service (Cont'd)

7. Special Access Service (Cont'd)

7. Special Access Service (Cont'd)

7. Special Access Service (Cont'd)

7. Special Access Service (Cont'd)

7. Special Access Service (Cont'd)

7. Special Access Service (Cont'd)

7. Special Access Service (Cont'd)

7. Special Access Service (Cont'd)

7. Special Access Service (Cont'd)

7. Special Access Service (Cont'd)

7. Special Access Service (Cont'd)

7. Special Access Service (Cont'd)

7. Special Access Service (Cont'd)

7. Special Access Service (Cont'd)

7. Special Access Service (Cont'd)

7. Special Access Service (Cont'd)

7. Special Access Service (Cont'd)

7. Special Access Service (Cont'd)

7. Special Access Service (Cont'd)

7. Special Access Service (Cont'd)

7. Special Access Service (Cont'd)

7. Special Access Service (Cont'd)

7. Special Access Service (Cont'd)

7. Special Access Service (Cont'd)

7. Special Access Service (Cont'd)

7. Special Access Service (Cont'd)

7. Special Access Service (Cont'd)

7. Special Access Service (Cont'd)

7. Special Access Service (Cont'd)

7. Special Access Service (Cont'd)

7. Special Access Service (Cont'd)

7. Special Access Service (Cont'd)

7. Special Access Service (Cont'd)

7. Special Access Service (Cont'd)

7. Special Access Service (Cont'd)

7. Special Access Service (Cont'd)

7. Special Access Service (Cont'd)

7. Special Access Service (Cont'd)

7. Special Access Service (Cont'd)

7. Special Access Service (Cont'd)

7. Special Access Service (Cont'd)

7. Special Access Service (Cont'd)

7. Special Access Service (Cont'd)

7. Special Access Service (Cont'd)

7. Special Access Service (Cont'd)

7. Special Access Service (Cont'd)

7. Special Access Service (Cont'd)

7. Special Access Service (Cont'd)

7. Special Access Service (Cont'd)

7. Special Access Service (Cont'd)

7. Special Access Service (Cont'd)

7. Special Access Service (Cont'd)

7. Special Access Service (Cont'd)

7. Special Access Service (Cont'd)

7. Special Access Service (Cont'd)

7. Special Access Service (Cont'd)

7. Special Access Service (Cont'd)

7. Special Access Service (Cont'd)

7. Special Access Service (Cont'd)

7. Special Access Service (Cont'd)

7. Special Access Service (Cont'd)

7. Special Access Service (Cont'd)

7. Special Access Service (Cont'd)

7. Special Access Service (Cont'd)

7. Special Access Service (Cont'd)

7. Special Access Service (Cont'd)

7. Special Access Service (Cont'd)

7. Special Access Service (Cont'd)

7. Special Access Service (Cont'd)

7. Special Access Service (Cont'd)

7. Special Access Service (Cont'd)

7. Special Access Service (Cont'd)

7. Special Access Service (Cont'd)

7. Special Access Service (Cont'd)

7. Special Access Service (Cont'd)

7. Special Access Service (Cont'd)

7. Special Access Service (Cont'd)

7. Special Access Service (Cont'd)